THIS DRAWING IS UNPUBLISHED. RELEASED FOR PUBLICATION -,- .
© COPYRIGHT - By - ALL RIGHTS RESERVED.

LOC	DIST
CM	54

REVISIONS

P	LTR	DESCRIPTION	DATE	DWN	APVD
	L1	REVISED PER ECO-11-004820	11MAR11	RK	HMR

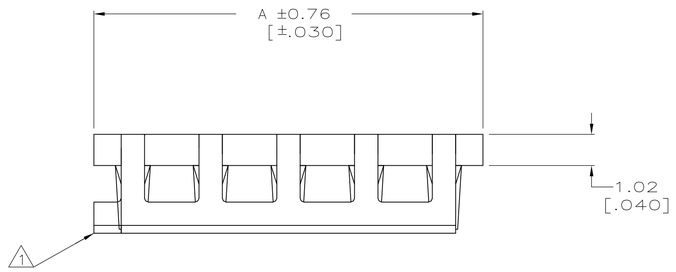

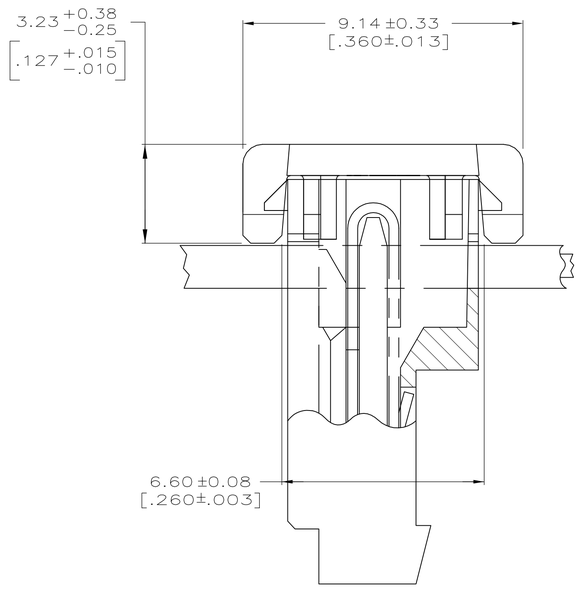

1. PART MAY BE MOLDED TO DESIRED POSITION SIZE OR CUT TO DESIRED POSITION SIZE FROM A LARGER POSITION SIZE PART. WHEN PART IS CUT TO DESIRED POSITION SIZE, A PORTION OF FRONT LOCKING BAR WILL REMAIN ATTACHED.
2. DIMENSIONS IN BRACKETS ARE IN INCHES.

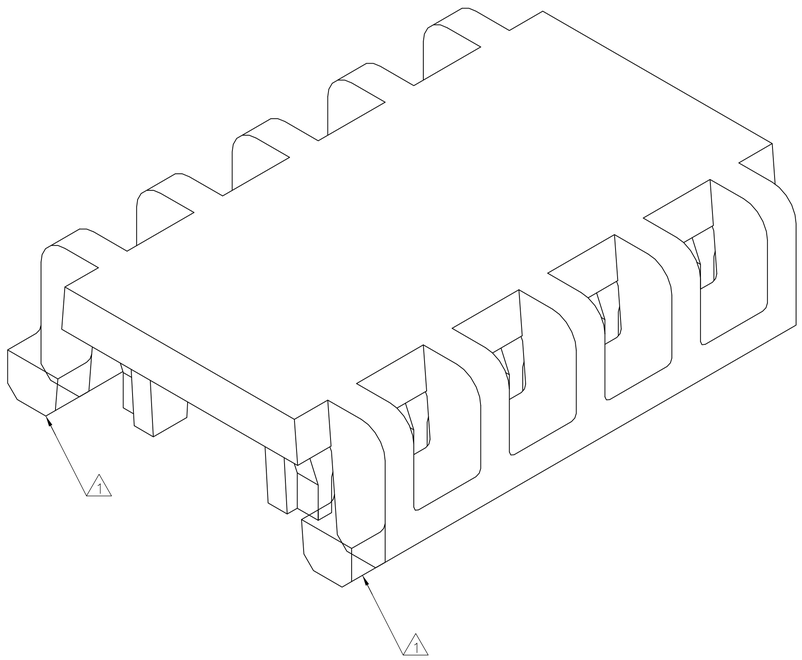

3-DIMENSIONAL MODEL
NTS

28 CIRCUIT ASSEMBLES	71.12 [2.800]	2-643077-8
27 CIRCUIT ASSEMBLES	68.58 [2.700]	2-643077-7
26 CIRCUIT ASSEMBLES	66.04 [2.600]	2-643077-6
25 CIRCUIT ASSEMBLES	63.50 [2.500]	2-643077-5
24 CIRCUIT ASSEMBLES	60.96 [2.400]	2-643077-4
23 CIRCUIT ASSEMBLES	58.42 [2.300]	2-643077-3
22 CIRCUIT ASSEMBLES	55.88 [2.200]	2-643077-2
21 CIRCUIT ASSEMBLES	53.34 [2.100]	2-643077-1
20 CIRCUIT ASSEMBLES	50.80 [2.000]	2-643077-0
19 CIRCUIT ASSEMBLES	48.26 [1.900]	1-643077-9
18 CIRCUIT ASSEMBLES	45.72 [1.800]	1-643077-8
17 CIRCUIT ASSEMBLES	43.18 [1.700]	1-643077-7
16 CIRCUIT ASSEMBLES	40.64 [1.600]	1-643077-6
15 CIRCUIT ASSEMBLES	38.10 [1.500]	1-643077-5
14 CIRCUIT ASSEMBLES	35.56 [1.400]	1-643077-4
13 CIRCUIT ASSEMBLES	33.02 [1.300]	1-643077-3
12 CIRCUIT ASSEMBLES	30.48 [1.200]	1-643077-2
11 CIRCUIT ASSEMBLES	27.94 [1.100]	1-643077-1
10 CIRCUIT ASSEMBLES	25.40 [1.000]	1-643077-0
9 CIRCUIT ASSEMBLES	22.86 [.900]	643077-9
8 CIRCUIT ASSEMBLES	20.32 [.800]	643077-8
7 CIRCUIT ASSEMBLES	17.78 [.700]	643077-7
6 CIRCUIT ASSEMBLES	15.24 [.600]	643077-6
5 CIRCUIT ASSEMBLES	12.70 [.500]	643077-5
4 CIRCUIT ASSEMBLES	10.16 [.400]	643077-4
3 CIRCUIT ASSEMBLES	7.62 [.300]	643077-3
2 CIRCUIT ASSEMBLES	5.08 [.200]	643077-2
USE ON MTA 100 ASSEMBLIES AS LISTED	A	PART NO

THIS DRAWING IS A CONTROLLED DOCUMENT.

DIMENSIONS: INCHES

TOLERANCES UNLESS OTHERWISE SPECIFIED:
0 PLC ± -
1 PLC ± -
2 PLC ± -
3 PLC ± 0.13 [.005]
4 PLC ± -
ANGLES ± -

MATERIAL: NYLON,UL 94V-2 WHITE
FINISH: -

DWN T. BECK 7-8-91
CHK R. SWING 7-8-91
APVD T. WERT 7-8-91
PRODUCT SPEC —
APPLICATION SPEC —
WEIGHT —

TE Connectivity

NAME: COVER, FEED-THRU, MOLDED, .060 MAX, O.D. WIRE, MTA-100

SIZE	CAGE CODE	DRAWING NO	RESTRICTED TO
A1	00779	C-643077	—

CUSTOMER DRAWING
SCALE 10:1 SHEET 1 OF 1 REV L1

4805 (3/11)