Alle Rechte vorbehalten/ *All rights reserved*

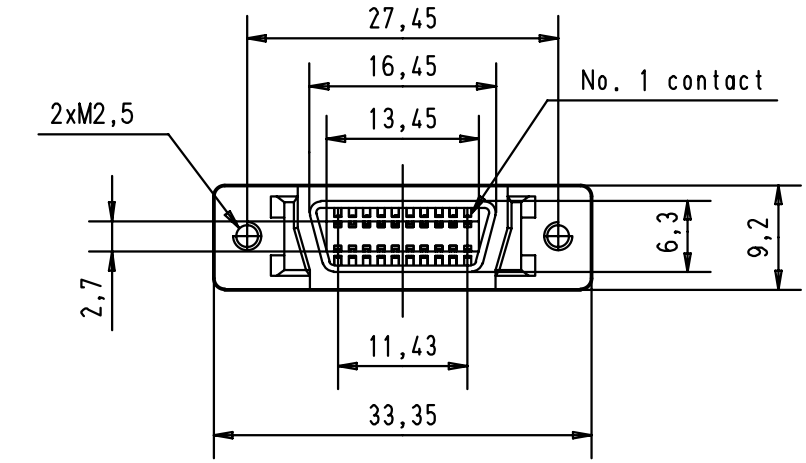


Printed board layout
Component side

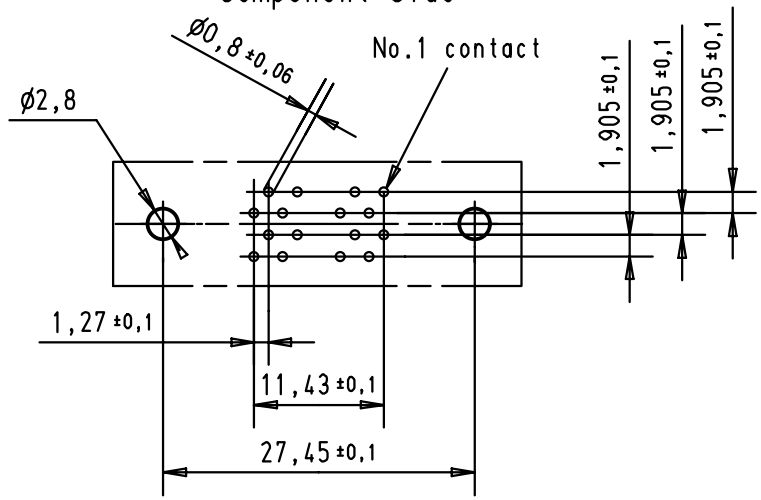


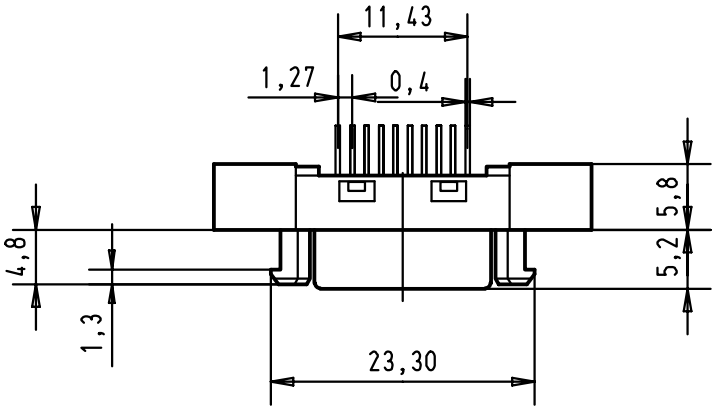


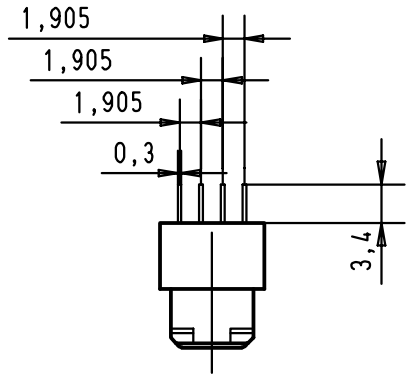


| | | | | Dat. | Name |
|---|---|---|---|---|---|
| | | | Detail. | 30-AUG-00 | JB |
| | | | Insp. | | |
| | | | Stand. | | |
| 27941 | 30-AUG-00 | JB | | | |
| Mod. | Dat. | Name | | | |

All Dim. in mm
Orig. Size DIN A 4

HARTING EURL
F-95972 Paris

*har.mik* ®
I/O bellow
20 poles female connector
with straight solder pins
and fixed latching

TB 60 11 020 5102

Sub.

Maßstab/ *Scale* 1,5:1

Blatt/ *Page* 1/1