RGBRF-RC2 & RGBRF-3x5A Series

RF wireless LED remote controller

Features

- Suitable for indoor LED lighting
- User-friendly interface, easy and simple operation
- High sensitive & high stable touch colour wheel, fast & precise colour control.
- Enable to control 2 zones separately. Each zone can switch on/off separately.
- Changing modes of 2 zones can be synchronized without any confusion.
- 1 changing modes. Enable to stay at any color under situation of colour changing modes.
- Adjustable changing speed with 8 levels, quickest speed is 4 S, slowest speed is 256 S.
- To work with power repeater to expand output unlimitedly.

Specification

	MODEL No.	RGBRF-RC2	RGBRF-3x5A
INPUT	Voltage	3.6Vdc min or 4.5Vdc (if using Alcholine Batteries)	12-36Vdc
OUTPUT	Max Load Current	3/4/5x5A	3x5A
	Rated Power	3/4/5x(60-180)W	3x(60-180)W
	Load Type	~	????
	Operation Frequency	434MHz/868MHz	~
PROTECTION	Temperature Range	~	-20°C ~ +50°C
ENVIRONMENTAL	TA	~	-20°C ~ +50°C
	TC	~	+75°C
OTHERS	Remarks	Load 3pcs 7AAA (1.5V) batteries (Batteries not included)	Constant Voltage

Mechanical Diagrams

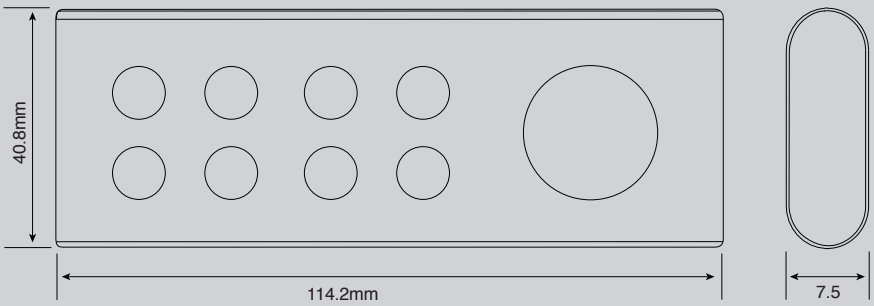

RGBRF-3x5A

Sunpower Technology LLP Orion House, Calleva Park, Aldermaston, Berkshire RG7 8SN Tel: +44 (0)118 981 1001 • E-mail: sales@sunpower-uk.com
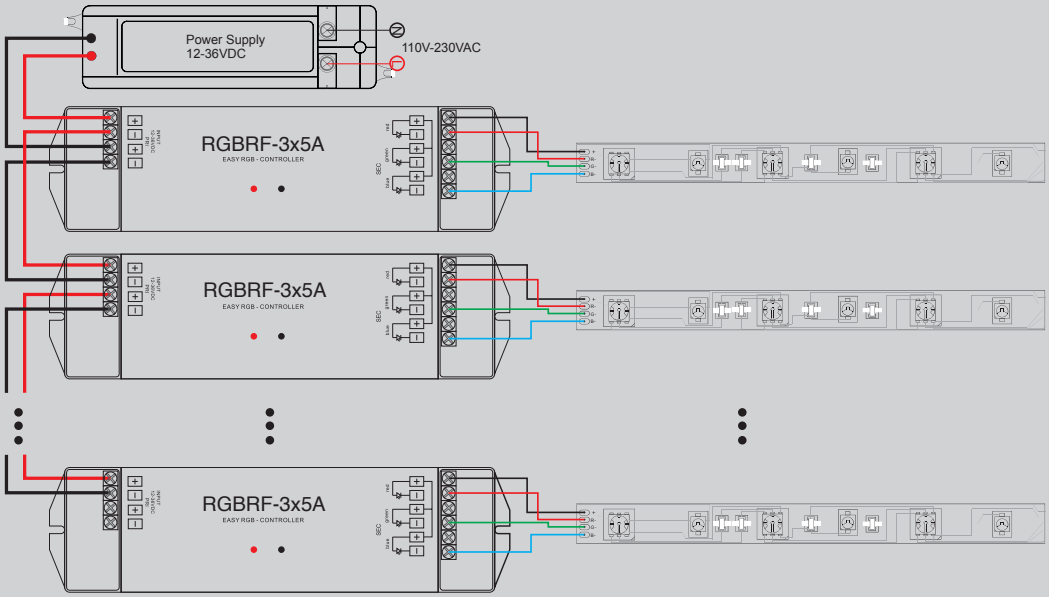
Wiring Diagram