**RG 125-19/12 N**

# DC centrifugal compact fan

single inlet

**ebm-papst St. Georgen GmbH & Co. KG**
Hermann-Papst-Str. 1
D-78112 St. Georgen
Phone +49 (0) 7724 81-0
Fax +49 (0) 7724 81-1309
info2@de.ebmpapst.com
www.ebmpapst.com

## Nominal data

| Type | RG 125-19/12 N | |
|---|---|---|
| Nominal voltage | VDC | 12 |
| Nominal voltage range | VDC | 7 .. 15 |
| Speed | $min^{-1}$ | 2550 |
| Power input | W | 5.2 |
| Min. ambient temperature | °C | -30 |
| Max. ambient temperature | °C | 75 |
| Air flow | $m^3/h$ | 87.5 |
| Sound power level | B | 5.8 |

ml = Max. load · me = Max. efficiency · fa = Running at free air · cs = Customer specs · cu = Customer unit
Subject to alterations

# DC centrifugal compact fan

single inlet

## Technical features

| | |
|---|---|
| **General description** | Backward-curved impeller |
| **Mass** | 0.730 kg |
| **Dimensions** | 180 x 180 x 40 mm |
| **Material of impeller** | Fiberglass-reinforced plastic |
| **Housing material** | Scroll housing of fiberglass-reinforced plastic, housing base of sheet steel. |
| **Direction of air flow** | Axial air intake, centrifugal air exhaust out of the outlet. |
| **Bearing** | Ball bearings |
| **Lifetime L10 at 40 °C** | 62500 h |
| **Lifetime L10 at maximum temperature** | 27500 h |
| **Connection line** | With single strands AWG 22, TR 64 |
| **Motor protection** | Protected against reverse polarity and locking. |
| **Locked-rotor protection** | Blocking and overload protection |
| **Approval** | VDE, CSA, UL, CE |



ebm-papst St. Georgen GmbH & Co. KG · Hermann-Papst-Str. 1 · D-78112 St. Georgen · Phone +49 (0) 7724 81-0 · Fax +49 (0) 7724 81-1309 · info2@de.ebmpapst.com · www.ebmpapst.com

# DC centrifugal compact fan

single inlet

## Product drawing

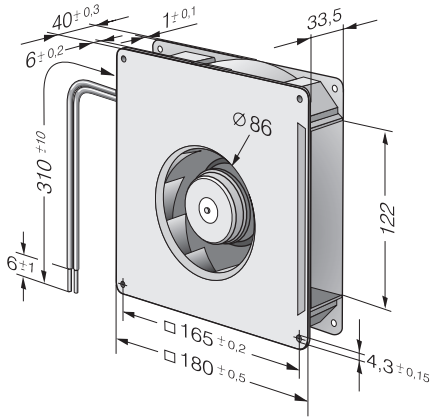




ebm-papst St. Georgen GmbH & Co. KG · Hermann-Papst-Str. 1 · D-78112 St. Georgen · Phone +49 (0) 7724 81-0 · Fax +49 (0) 7724 81-1309 · info2@de.ebmpapst.com · www.ebmpapst.com

# DC centrifugal compact fan

single inlet

## Charts: Air flow

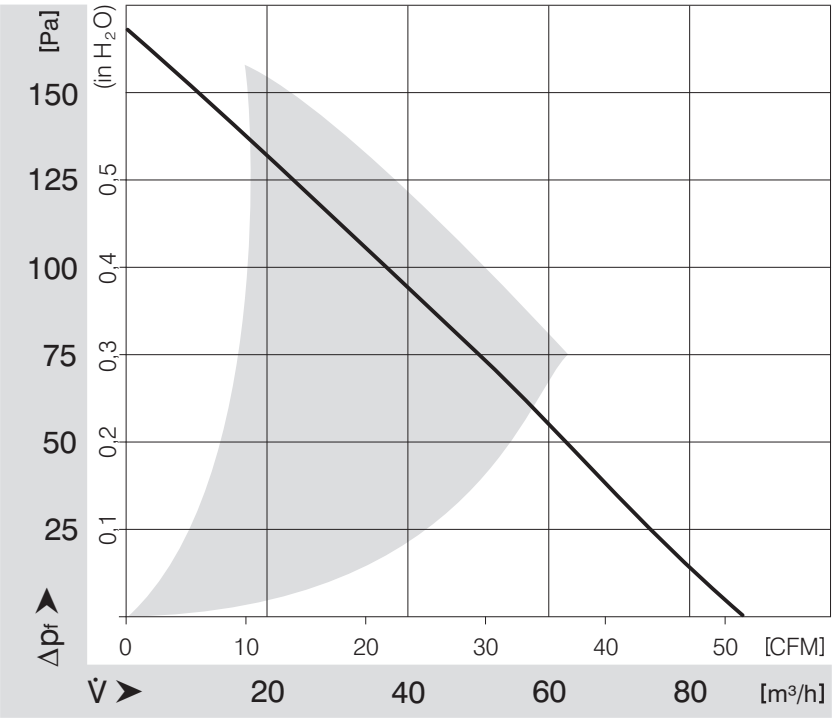




ebm-papst St. Georgen GmbH & Co. KG · Hermann-Papst-Str. 1 · D-78112 St. Georgen · Phone +49 (0) 7724 81-0 · Fax +49 (0) 7724 81-1309 · info2@de.ebmpapst.com · www.ebmpapst.com