How to assemble your Kombi*SIGN* 72 signal tower

Classic*LOOK*

Design*LOOK*

STEP 1
Select the required optical or audible elements in the correct voltage (for details see page 41).

Audible Signal Element
- 2 tone siren

Optical Signal Elements
- Twin*LIGHT*
- Twin*FLASH*

STEP 2
Select the appropriate mounting option for your application.

STEP 3
Select the correct terminal element for your mounting option (for details see page 45).

Base Mounting

Terminal element with CAGE CLAMP® technology
Order no. **640 800 00**

Tube Mounting

Terminal element with CAGE CLAMP® technology
Order no. **640 810 00**

Base Mounting

Terminal element with CAGE CLAMP® technology
Order no. **640 900 00**

Tube Mounting

Terminal element with CAGE CLAMP® technology
Order no. **640 910 00**

STEP 4
Where appropriate, select a base and the desired tube length (only for tube mounting) (For details see page 64).

Base with integrated tube
Order no.
975 840 10

Tube Ø 25 mm, all anodized

	Order no.
100 mm long	**975 845 10**
250 mm long	**975 840 25**
400 mm long	**975 840 40**
600 mm long	**975 840 60**
800 mm long	**975 840 80**
1000 mm long	**975 840 03**

Base for Tube, plastic
Order no. **975 840 90**

Base for Tube, metal
Order no. **975 840 91**

Base with integrated tube
Order no.
960 000 51

Tube Ø 25 mm, all anodized

	Order no.
100 mm long	**975 845 10**
250 mm long	**975 840 25**
400 mm long	**975 840 40**
600 mm long	**975 840 60**
800 mm long	**975 840 80**
1000 mm long	**975 840 03**

Base for Tube, plastic
Order no. **960 000 50**

STEP 5
Where appropriate, select the bracket and the contact box (for details see page 64).

Bracket for base mounting
Order no. **960 000 02**

Bracket for 1-sided mounting
Order no. **975 840 85**

Bracket for 2-sided mounting
Order no. **975 840 86**

Bracket for base mounting with concealed cable entry
Order no. **960 000 14**

Bracket for tube mounting
Order no. **960 000 01**

Bracket for base mounting
Order no. **960 000 53**

Bracket for 1-sided mounting
Order no. **960 000 52**

Bracket for base mounting with concealed cable entry
Order no. **960 000 55**

Bracket for tube mounting
Order no. **960 000 54**

Look at the signal device section on:
www.werma.com

With the new **signal tower configurator** you can put together your own individual signal tower.

Further accessories can be found in our main catalogue or at **www.werma.com**.

Kombi*SIGN* 72 - Optical Signal Elements

TECHNICAL SPECIFICATIONS/ORDER SPECIFICATIONS:

	Classic*LOOK*	Design*LOOK*
Dimensions (Ø x Height):	70 mm x 65,5 mm	
Lens:	PC, transparent	
Twin*LIGHT*		
Light effects:	LED Permanent light, LED Blinking light, adjustable via slide switch	
Voltage:	24 V AC/DC	
Current consumption:	< 80 mA	
red	**647 110 75**	**647 130 75**
green	**647 210 75**	**647 230 75**
yellow	**647 310 75**	**647 330 75**
white	**647 430 75**	**647 430 75**
blue	**647 510 75**	**647 530 75**
Twin*FLASH*		
Light effect:	LED Flashing light, LED EVS light, adjustable via slide switch	
Voltage:	24 V DC	
Current consumption:	< 80 mA	
red	**647 120 55**	**647 140 55**
green	**647 220 55**	**647 240 55**
yellow	**647 320 55**	**647 340 55**
white	**647 440 55**	**647 440 55**
blue	**647 520 55**	**647 540 55**

TECHNICAL DIAGRAM:

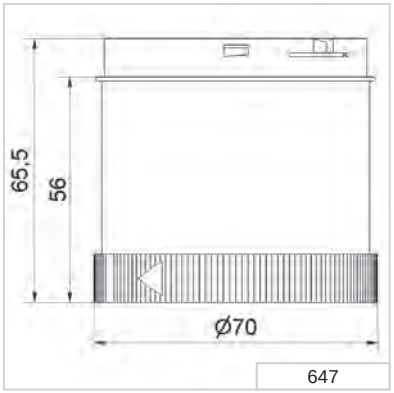

in preparation

Kombi*SIGN* 72 - Terminal Elements

TECHNICAL SPECIFICATIONS/ORDER SPECIFICATIONS:

	Classic*LOOK*	Design*LOOK*
Dimensions (Ø x Height):	70 mm x 42,5 mm	
Housing:	Terminal element: PA-GF Cap: PC	
Fixing:	Base mounting, Tube mounting for tube Ø 25 mm (accessory), Bracket mounting (accessory)	
Cable entry:	Cable diameter max. 11 mm	
Connection:	CAGE CLAMP® technology max. 1,5 mm²	
Protection rating:	IP 65	
Number of tiers possible:	Max. 5	
Voltage:	12-230 V AC/DC	
Base mounting	**640 800 00**	**640 900 00**
Tube mounting	**640 810 00**	**640 910 00**

ACCESSORIES:

	Classic*LOOK*	Design*LOOK*
Base with integrated tube	**975 840 10**	**960 000 51**
Bracket for 1-sided mounting	**975 840 85**	**960 000 52**
Bracket for base mounting	**960 000 02**	**960 000 53**
Bracket for tube mounting	**960 000 01**	**960 000 54**
Bracket for base mounting with concealed cable entry	**960 000 14**	**960 000 55**
Base for tube Ø 25 mm, plastic	**975 840 90**	**960 000 50**

Additional accessoires can be found on page 64.

TECHNICAL DIAGRAMS:

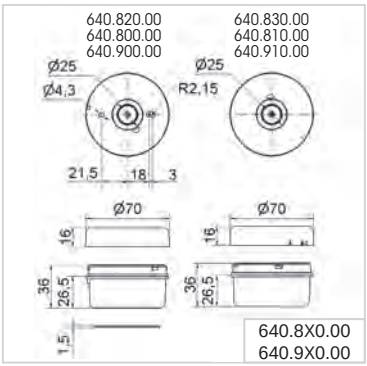

640.8X0.00 640.9X0.00 in preparation Max.

Kombi*SIGN* 71, 72 and 40 - Classic*LOOK*

Foldaway Base - Signal Tower can be folded away, including rubber seal, for tube (all anodized aluminium) Ø 25 mm (not included in assembly)
Order no. 960 000 30

Dimensions (Ø x Height):	70 mm x 117 mm
Material:	PA-GF
Cable diameter:	Max. 14 mm
Fixing:	Vertical, horizontal, Positioning in 7.5° steps

QUICK AND SIMPLE MOUNTING:

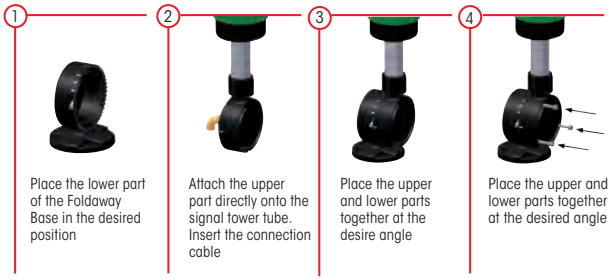

Foldaway Base - Signal Tower can be folded away, including rubber seal, for tube (all anodized aluminium) Ø 25 mm (not included in assembly)
Order no. 960 009 12

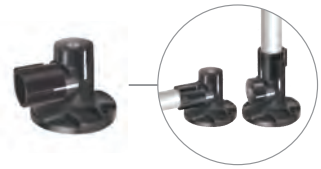

Dimensions (Ø x Height):	70 mm x 85 mm
Material:	PA-GF
Cable diameter:	Max. 8 mm
Fixing:	Vertical, horizontal, Positioning in 0° and 90°

QUICK AND SIMPLE MOUNTING:

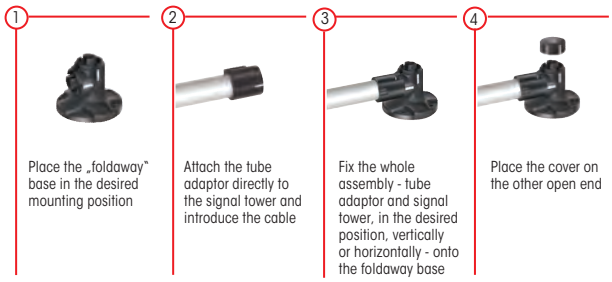

Tube with clamp, Ø 25 mm, 250 mm long, incl. cable gland
Order no. 960 000 18

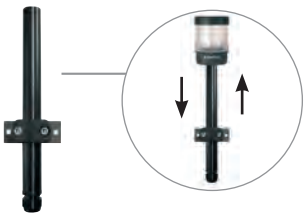

Base with integrated tube, Ø 25 mm, 110 mm long, plastic, incl. rubber seal
Order no. 975 840 10

Tube Ø 25 mm, all anodized aluminium

100 mm long	**975 845 10**
250 mm long	**975 840 25**
400 mm long	**975 840 40**
600 mm long	**975 840 60**
800 mm long	**975 840 80**
1000 mm long	**975 840 03**

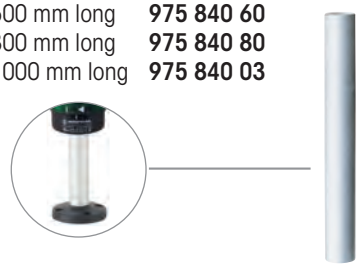

Base for tube mounting, Ø 25 mm, plastic, incl. rubber seal
Order no. 975 840 90

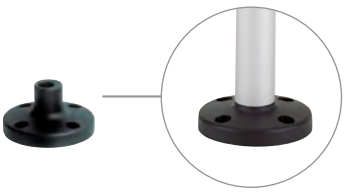

Base for tube Ø 25 mm, metal, incl. rubber seal, recommended for tube lengths of 400 mm and longer
Order no. 975 840 91

Overview Accessories for Signal Towers

TECHNICAL DIAGRAMS:

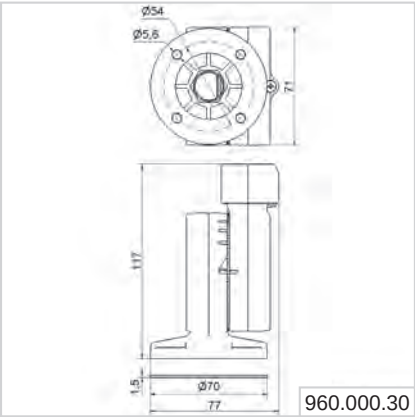

960.000.30

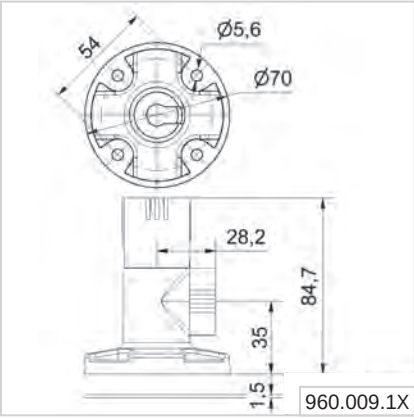

960.009.1X

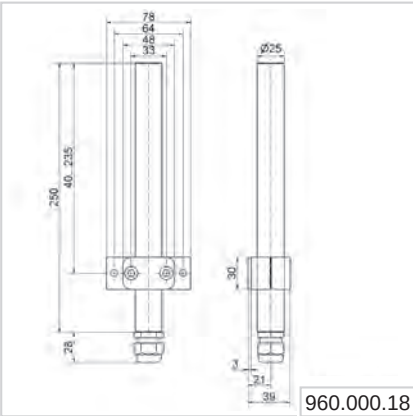

960.000.18

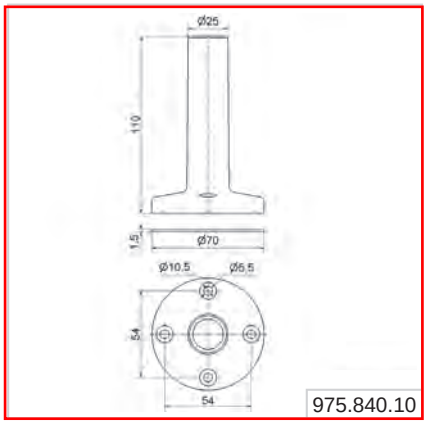

975.840.10

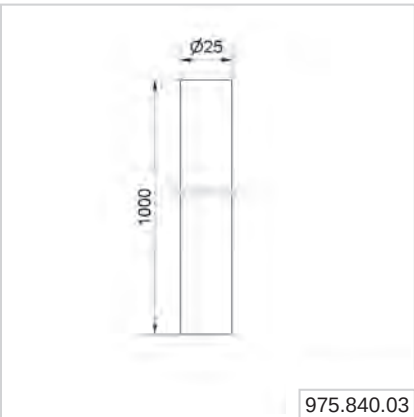

975.840.03

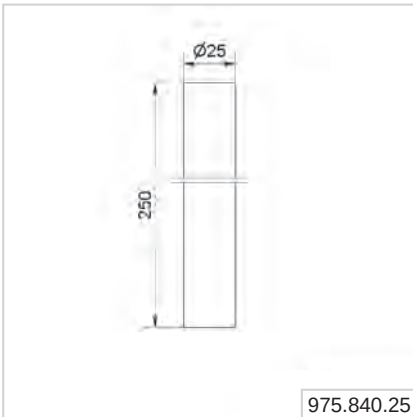

975.840.25

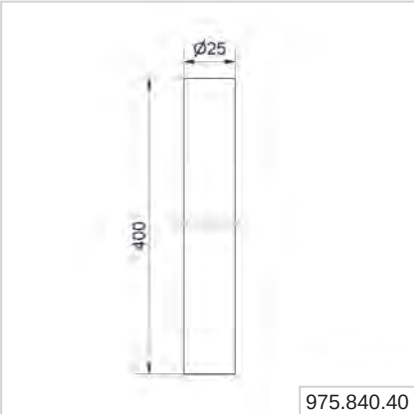

975.840.40

975.840.60

975.840.80

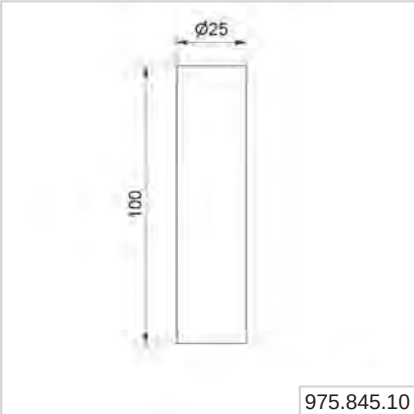

975.845.10

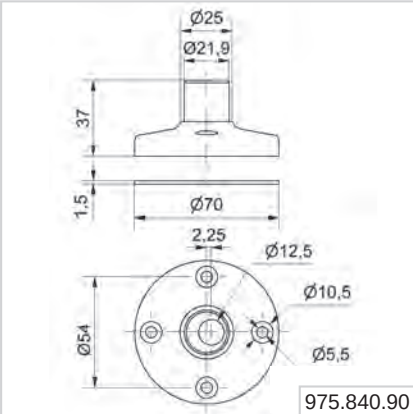

975.840.90

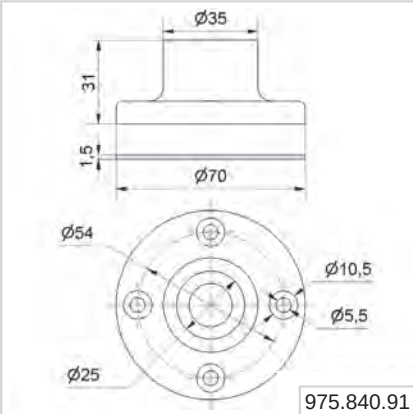

975.840.91

WERMA

640,641,643
644,645,647

EN 60947-5-1

640/647

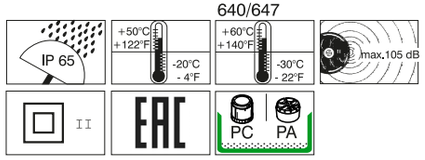

(D) Teilweise, siehe Produktkennzeichnung.
(GB) Partially, check the product label.
(F) Partiellement, vérifiez sur étiquette du produit.

KombiSIGN 71/72

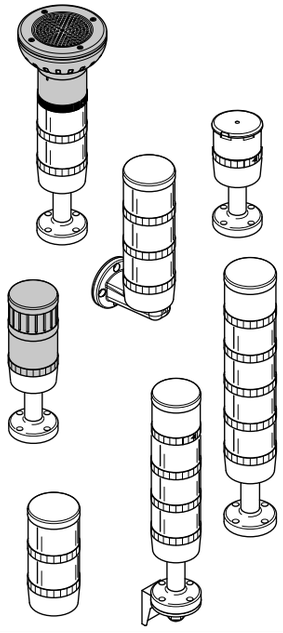

310.640.001.0817_AJ ©(D)

WERMA

WERMA Signaltechnik GmbH + Co. KG
D-78604 Rietheim-Weilheim
Telefon +49 (0)7424 / 9557-0
Telefax +49 (0)7424 / 9557-44
info@werma.com
www.werma.com

DANGER

II

(D) Anschluss **ausschließlich** durch ausgebildete Elektro-Fachkräfte.
(GB) Electrical connection is to be made by trained electrical specialists **only**.
(F) Le branchement doit **uniquement** être effectué par des professionnels.
(I) Il collegamento deve essere eseguito **solo** da elettricisti specializzati.
(E) La conexión **sólo** debe ser realizada por electricistas debidamente formados.
(PT) A ligação deve ser feita **exclusivamente** por profissional elétrico especializado.
(NL) De aansluiting mag **enkel** gebeuren door erkende vakmensen.
(CZ) Připojení smí **provádět** pouze kvalifikovaný personál.
(PL) Podłączenie **wyłącznie** przez specjalistów-elektryków.
(FI) Liittäminen kuuluu **ainoastaan** koulutettujen sähköalan ammattilaisten tehtäviin.
(RUS) Подключение проводится только специалистом-электриком.
(TR) Bağlantı **sadece** eğitimli elektrik teknisyenleri tarafından yapılmalıdır.
(CN) 布线需由专业电工执行

DANGER EVS

644 x40 55
647 x20 55
647 x40 55

(D) Bei Epilepsie ungeeignet!
(GB) Unsuitable for epilepsy sufferers.
(F) Ne convient pas aux personnes souffrant d'épilepsie.
(I) Inadatto per epilettici.
(E) Inadecuado para epilépticos.
(PT) Não aconselhavel a pessoas que sofram de Epilepsia.
(NL) Niet geschikt voor epileptici.
(CZ) Nevhodné pro epileptiky.
(PL) Nie stosować przy zchorzeniu padaczki.
(FI) Ei sovellu epileptikoille.
(RUS) Не подходит для страдающих эпилепсией.
(TR) Epilepsi hastaliği olanlarin kullanmamasi önerilir.
(CN) 不适用于癫痫病患者

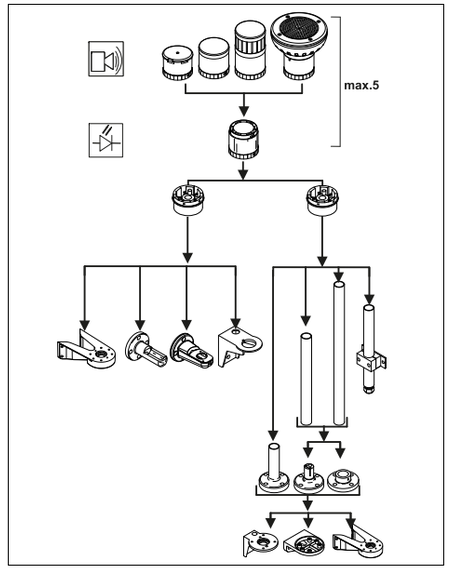

Terminal element	640 xx0 00	12-230 V≃	
TwinLIGHT	647 x10 75	24 V≃	< 80 mA
	647 x30 75	24 V≃	< 80 mA
TwinFLASH	647 x20 55	24 V=	< 80 mA
	647 x40 55	24 V=	< 80 mA
Multicolour	644 450 55	24 V=	< 120 mA
LED Permanent	644 x00 75	24 V≃	< 35 mA
	644 x00 67	115 V~	< 25 mA
	644 x00 68	230 V~	< 35 mA
LED Blinking	644 x10 75	24 V≃	< 30 mA
	644 x10 67	115 V~	< 25 mA
	644 x10 68	230 V~	< 35 mA
LED Flash	644 x20 55	24 V=	< 35 mA
LED Rotating	644 x30 75	24 V≃	< 40 mA
LED Ultrabright	644 x80 55	24 V=	< 190 mA
LED-EVS	644 x40 55	24 V=	< 350 mA
Xenon Flash (2Ws)	643 x00 54	12 V=	195 mA
	643 x00 55	24 V=	125 mA
	643 x00 67	115 V~	22 mA
	643 x00 68	230 V~	15 mA
	643 x10 55	24 V=	< 125 mA
Permanent	641 x00 00	12-230 V≃	
BA 15 d	956 x00 75	24 V≃	< 45 mA
	956 x00 67	115 V~	< 15 mA
	956 x00 68	230 V~	< 15 mA
BA 15 d, < 42 mm	955 840 34	12 V	5W
	955 840 35	24 V	5W
	955 840 38	230 V	5W
	955 840 57	115 V	5W
95 - 105dB	645 x70 75	24 V≃	< 40mA
< 85 dB	645 800 75	24 V≃	< 25 mA
	645 800 77	115 V~	< 35 mA
	645 800 68	230 V~	< 35 mA
< 102 dB	645 x90 75	24 V≃	< 30 mA
	645 890 60	115-230 V~	< 45 mA
< 100 dB	645 850 55	24 V=	< 80 mA
80 - 100 dB	645 810 55	24 V=	< 150 mA
< 88 dB	645 840 55	24 V=	< 400 mA
< 102 dB	645 860 55	24 V=	< 400 mA
< 105 dB	645 830 55	24 V=	< 100 mA

1

1a: 640 x00 00, 640 820 00
1b: 640 x00 00, 640 820 00 + 975 840 85, 960 000 52, 975 840 86
1c: 640 x10 00, 640 830 00 + 975 840 10, 960 000 51, 975 840 90, 960 000 50, 975 840 91, ...
1d: 640 x00 00, 640 820 00 + 960 000 02, 960 000 53, 960 000 01, 960 000 54
1e: 940 000 41

1a

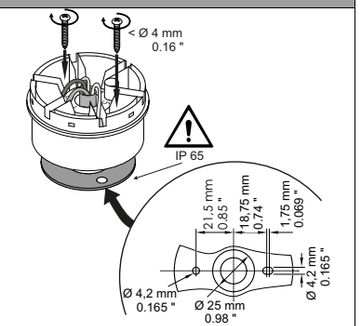

1b

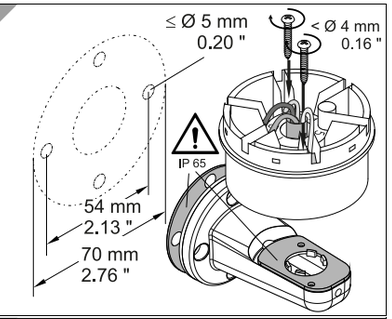

1c

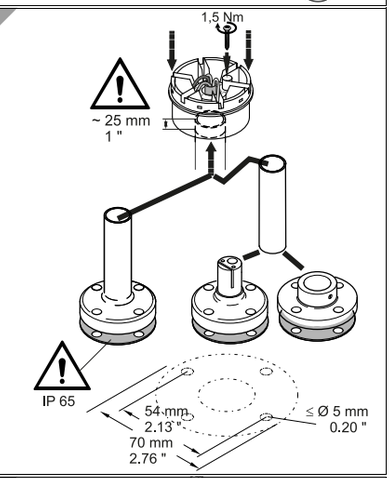

1d

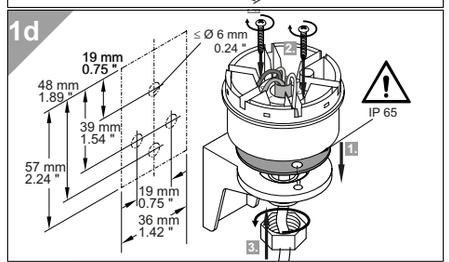

1e

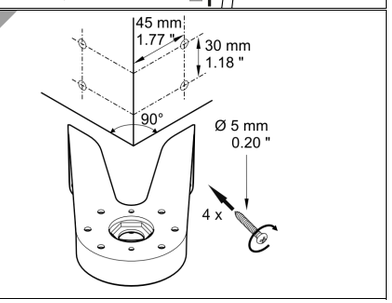

2

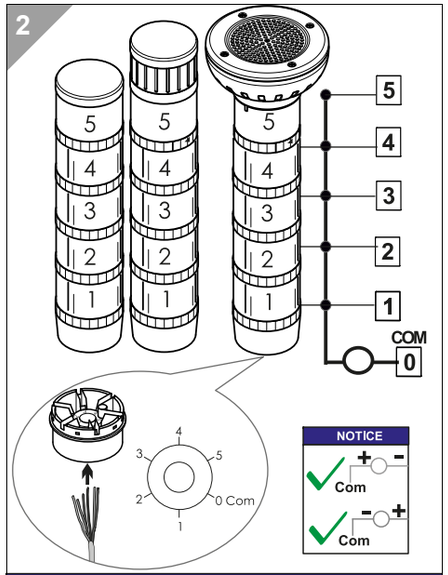

NOTICE
Multicolour 644 450 55

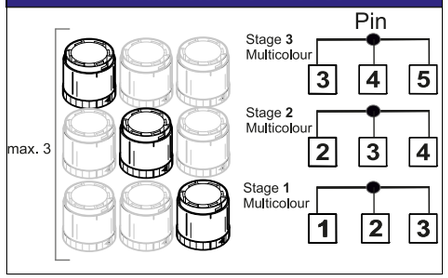

Colour (**RD**)	**24V**		
Colour (**GN**)		**24V**	
Colour (**YE**)	**24V**	**24V**	
Colour (**BU**)			**24V**
Colour (**WH**)	**24V**	**24V**	**24V**
Colour (**TQ**)		**24V**	**24V**
Colour (**VT**)	**24V**		**24V**

3

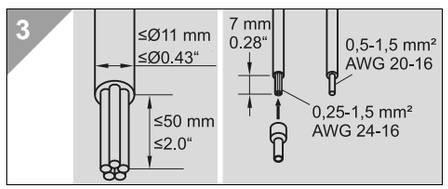

4

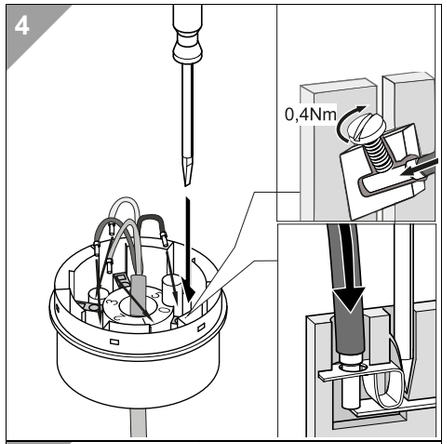

5

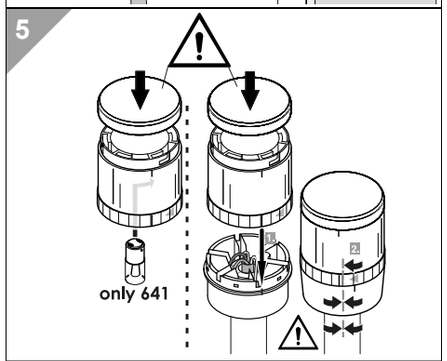

6a 647 x10 75 / 647 x30 75

* = Default setting

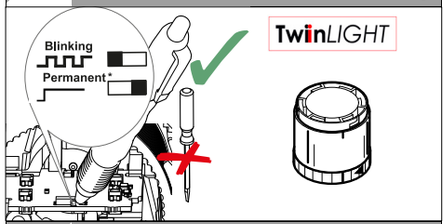

6b 647 x20 55 / 647 x40 55

* = Default setting

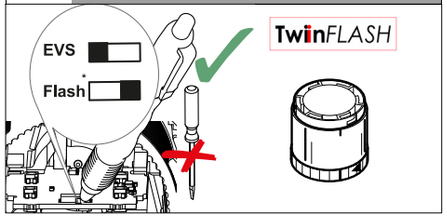

7

WARNING

max. 85-105dB

NOTICE
dB = dB A (SPL) 1m

7a 645 x70 75

* = Default setting

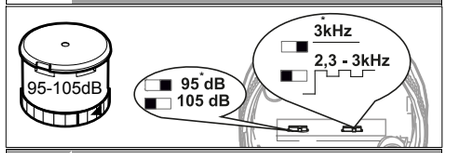

7b 645 800 xx

* = Default setting

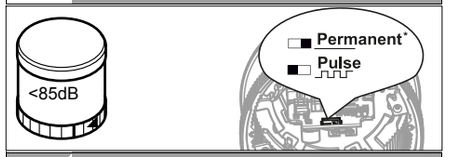

7c 645 x90 xx

* = Default setting

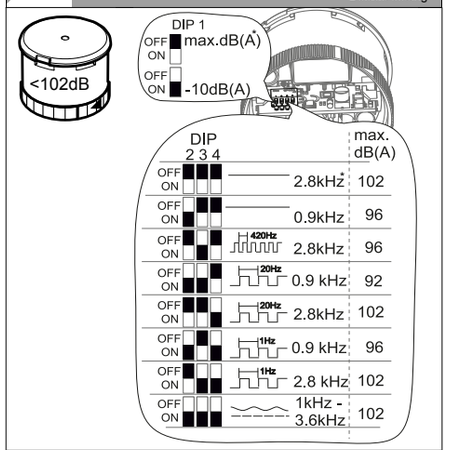

7d 645 810 55

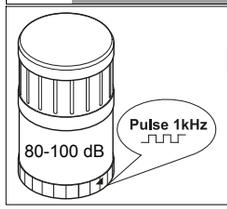

NOTICE
self-adjusting sound output

7e 645 850 55

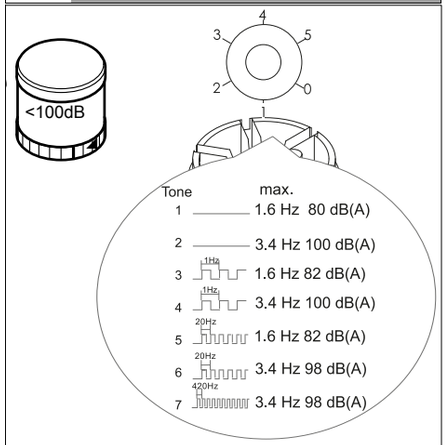

		Pin terminal element				
	Tone	1	2	3	4	5
	1	+24V	+24V	NC		
	2	+24V	+24V	+24V		
	3	+24V	NC	NC		
	4	+24V	NC	+24V		
	5	NC	+24V	NC		
	6	NC	+24V	+24V		
	7	NC	NC	+24V		
	1		+24V	+24V	NC	
	2		+24V	+24V	+24V	
	3		+24V	NC	NC	
	4		+24V	NC	+24V	
	5		NC	+24V	NC	
	6		NC	+24V	+24V	
	7		NC	NC	+24V	
	1			+24V	+24V	NC
	2			+24V	+24V	+24V
	3			+24V	NC	NC
	4			+24V	NC	+24V
	5			NC	+24V	NC
	6			NC	+24V	+24V
	7			NC	NC	+24V
	1				+24V	+24V
	3				+24V	NC
	5				NC	+24V
	3					+24V

7f 645 840 55 / 645 860 55

NOTICE
(D) Handbuch auf dem Sprachausgabeelement beachten.
(GB) Notice the manual on the vocal element

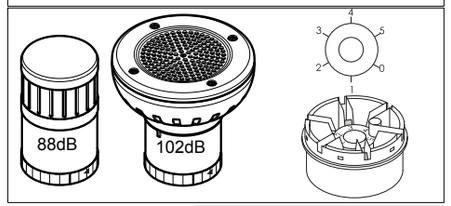

		Pin terminal element				
	Tone	1	2	3	4	5
	1	+24V	+24V	NC	NC	NC
	2		NC	+24V	NC	NC
	3		+24V	+24V	NC	NC
	4		NC	NC	+24V	NC
	5		+24V	NC	+24V	NC
	6		NC	+24V	+24V	NC
	7		+24V	+24V	+24V	NC
	8		NC	NC	NC	+24V
	9		+24V	NC	NC	+24V
	10		NC	+24V	NC	+24V
	11		+24V	+24V	NC	+24V
	12		NC	NC	+24V	+24V
	13		+24V	NC	+24V	+24V
	14		NC	+24V	+24V	+24V
	15		+24V	+24V	+24V	+24V
	1			+24V	NC	NC
	2			NC	+24V	NC
	3			+24V	+24V	NC
	4			NC	NC	+24V
	5			+24V	NC	+24V
	6			NC	+24V	+24V
	7			+24V	+24V	+24V
	1				+24V	NC
	2				NC	+24V
	3				+24V	+24V
	1				+24V	+24V

© (D)

Andon Smart*BOX* for Signal Towers

Andon Smart*BOX* for use in industrial applications

TECHNICAL SPECIFICATIONS/ORDER SPECIFICATIONS:

Dimensions (B x H x T):	161 mm x 79 mm x 138 mm
Housing:	PA-GF Switches: PC
Fixing:	Base mounting, Wall mounting
Connection:	Via 5 m cable
Number of signal elements:	Max. 4 additional signal elements possible
Assembly:	Andon Smart*BOX*, power supply unit with connection cable (length 1.8 m), USB power supply, Adapter supplied (EU, UK, North America)
Voltage power supply unit:	100-240 V AC
Voltage signal elements:	24 V DC
Current consumption:	Max. 1 A
Order no.:	**860 000 09**

TECHNICAL DIAGRAMS:

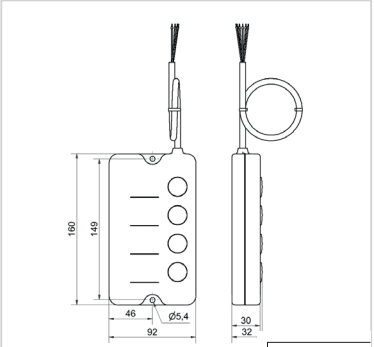

860.000.09

Interchangeable adaptors (included in assembly) and wide input voltage range make the Power Supply suitable for worldwide use

582 g

IP30

+40°C

0°C

WERMA SIGNALTECHNIK **860**

EN 60950-1

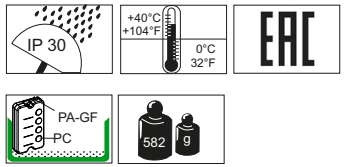

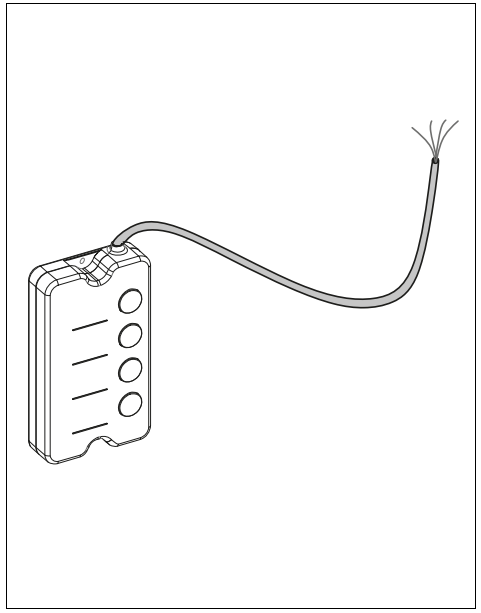

⚠ DANGER

(D) Anschluss **ausschließlich** durch ausgebildete Elektro-Fachkräfte. Betrieb **ausschließlich** mit dem im Lieferumfang enthaltenen Netzteil zulässig.

(GB) Electrical connection is to be made by trained electrical specialists **only**. Operation **only** with power adapter included in assembly.

(F) Le branchement doit **uniquement** être effectué par des professionnels. Opération **seulement** permise avec le bloc d'alimentation compris dans la livraison et câble.

(I) Il collegamento deve essere eseguito **solo** da elettricisti specializzati. Questo prodotto deve essere utilizzato **solo** con l'allegato alimentatore e con il cavo.

(E) La conexión **sólo** debe ser realizada por electricistas debidamente formados. Este producto se debe utilizar solamente con la fuente de alimentación (incluido en el volumen entregado).

(PT) A ligação deve ser feita **exclusivamente** por profissional elétrico especializado. Operação apenas com adaptador de corrente incluído na embalagem.

(NL) De aansluiting mag **enkel** gebeuren door erkende vakmensen. Werkt **enkel** met stroom adapter (inclusief in de assemblage).

(CZ) Připojení smí provádět pouze kvalifikovaný personál. Funkční pouze s originálním napájecím adaptérem.

(PL) Podłączenie wyłącznie przez specjalistów-elektryków. Praca tylko i wyłącznie z zasilaczem znajdującym się w zestawie.

(FI) Liittäminen kuuluu ainoastaan koulutettujen sähköalan ammattilaisten tehtäviin. Käyttö vain toimitukseen sisältyvällä verkkolaitteella.

(RUS) Подключение проводится только специалистом-электриком. Эксплуатация допускается только с входящими в комплект поставки блоком.

(TR) Bağlantı sadece eğitimli elektrik teknisyenleri tarafından yapılmalıdır. Sadece montaj dahilinde verilen güç adaptörü.

(CN) 布线需由专业电工执行。只能用自带适配器工作。

	KombiSIGN 40	KombiSIGN 70	KombiSIGN 71	KombiSIGN 72
Acoustic/ Cap/ Light (max. 4)	634/ 635	840/842, 843/844	641/643, 644/645	645/ 647
Slave/ Transmitter/ Master/ Receiver		860/861	860/861	860/861
Terminal element	630	840	640	640

Output

Output: 24 V=, Imax 1 A

Andon SmartBOX	860.000.09	860.000.09	860.000.09	860.000.09

Input

⚠ DANGER

Input: 115-230 V~, 50-60 Hz

© (D)

WERMA SIGNALTECHNIK
WERMA Signaltechnik GmbH + Co. KG
D-78604 Rietheim-Weilheim
Telefon +49 (0)7424 / 9557-0
Telefax +49 (0)7424 / 9557-44
info@werma.com
www.werma.com

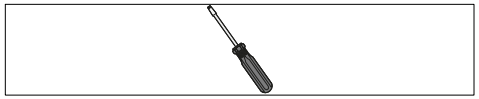

1

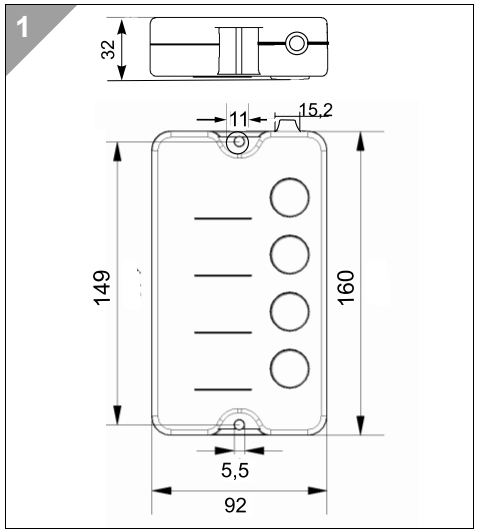

2 DANGER

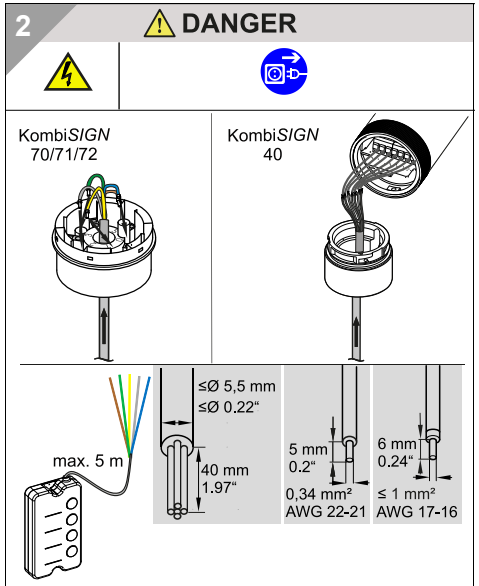

Anschlussklemme Pin	Litzenfarbe Wire colour
1	weiß, white
2	braun, brown
3	grün, green
4	gelb, yellow
5 - 24 V	grau, grey
-	-
0 - GND	blau, blue
-	-

3

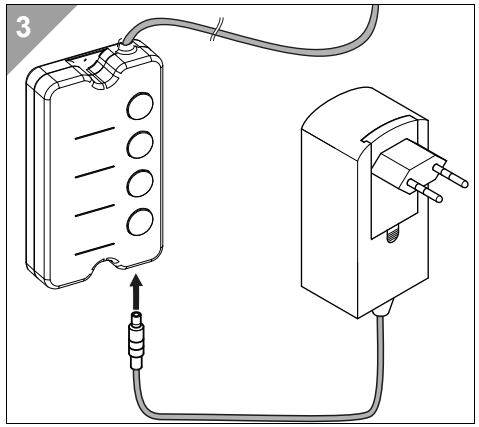

4 DANGER

Input: 115-230 V~, 50-60 Hz
Output: 24 V=, Imax 1 A

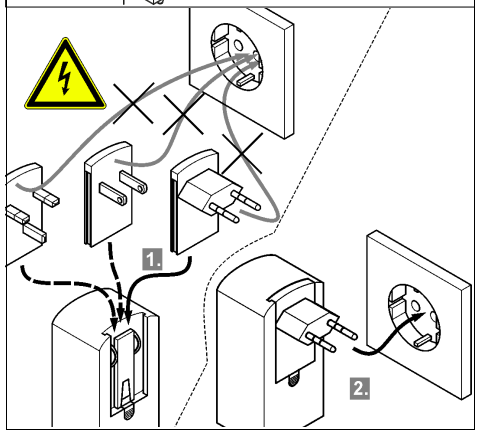

5

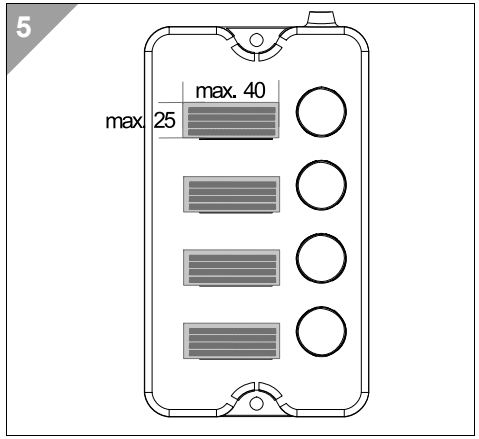

Mode

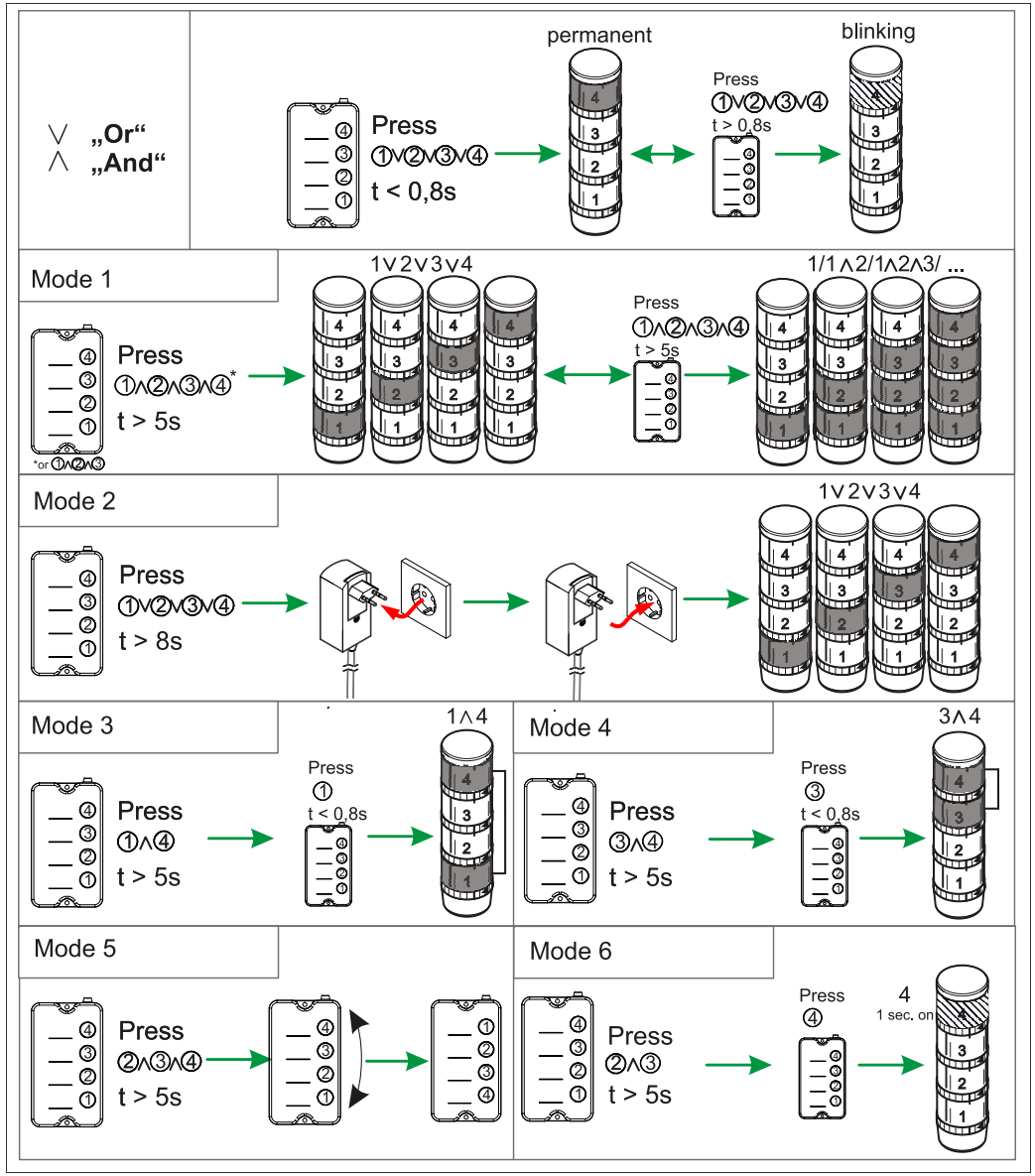

310.860.020.1116_AB

© Ⓓ

WERMA SIGNALTECHNIK