THIS DRAWING IS UNPUBLISHED. RELEASED FOR PUBLICATION -,- .
© COPYRIGHT - BY TYCO ELECTRONICS CORPORATION. ALL RIGHTS RESERVED.

LOC	DIST
G	14

REVISIONS

P	LTR	DESCRIPTION	DATE	DWN	APVD
	A1	REV PER ECR 10-005269	09MAR10	JR	TM

AMP WIRE RANGE	Listed FILE E13288	LR7189 Certified
3/0 AWG SOLID OR STRANDED	3/0 AWG STRANDED	3/0 AWG SOLID OR STRANDED

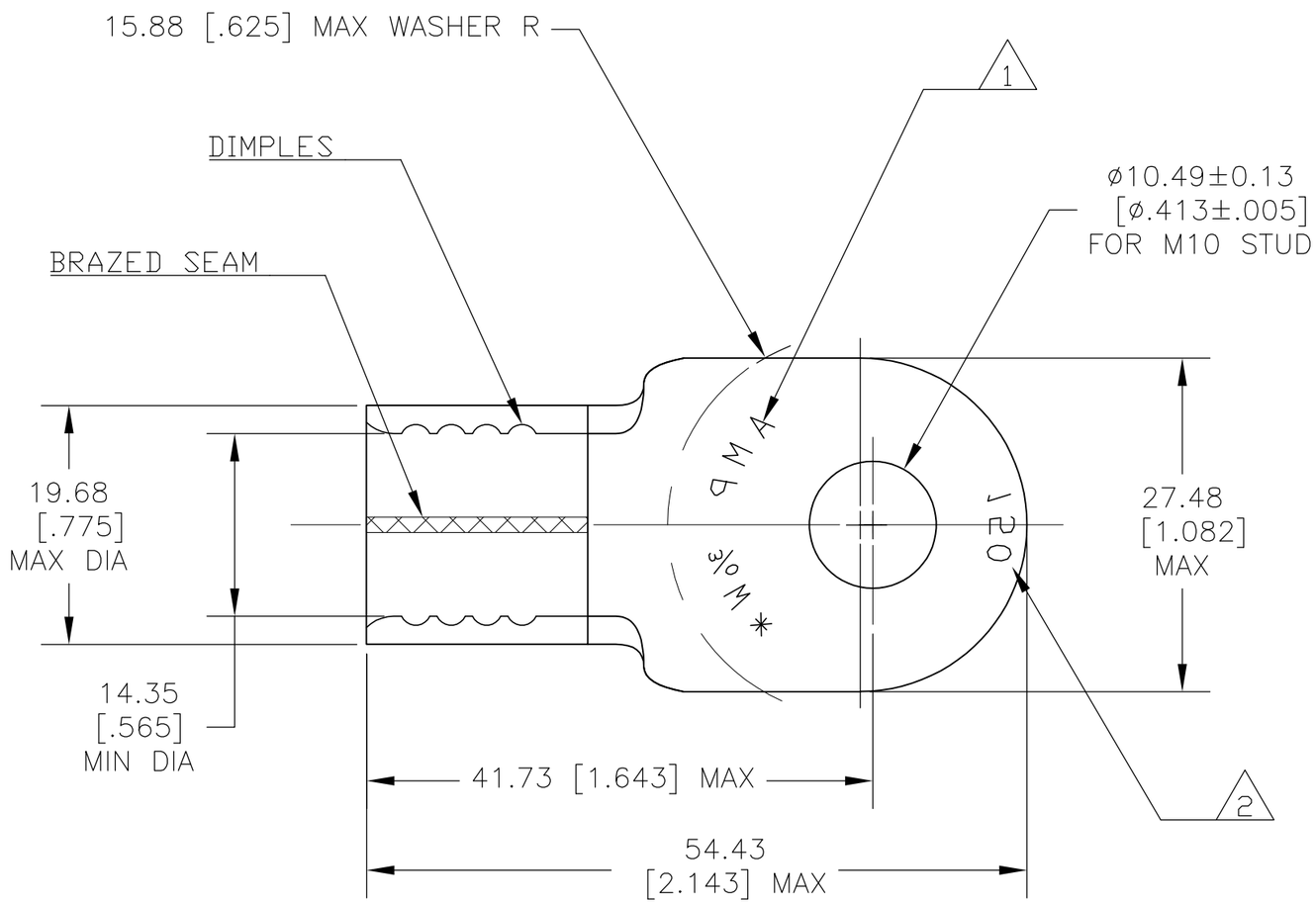

1. STAMP "AMP3/0W*", APPROX AS SHOWN.
2. STAMP "150", APPROX AS SHOWN.
3. TONGUE MATERIAL THK 2.31±0.08 [.091±.003]
4. COPPER PER ASTM B-152, ANNEALED
5. TIN PLATE 0.00254 [.000100] MIN THK PER ASTM B-545

QTY	PACKAGE TYPE	PART NO
50	LOOSE PIECE	160003

CUSTOMER SERVICE SYSTEMS

FOR ADDITIONAL PRODUCT INFORMATION OR COPIES OF DRAWINGS AND TECHNICAL DOCUMENTS	PRODUCT INFORMATION CENTER 1-800-522-6752
FOR APPLICATION TOOLING INFORMATION	TOOLING ASSISTANCE CENTER 1-800-722-1111
FOR ORDER ENTRY	1-800-526-5142

THIS DRAWING IS A CONTROLLED DOCUMENT FOR AMP INCORPORATED. IT IS SUBJECT TO CHANGE AND THE CONTROLLING ENGINEERING ORGANIZATION SHOULD BE CONTACTED FOR THE LATEST REVISION.

MAX RECOMMENDED OPERATING TEMPERATURE: 170°C

VOLTAGE RATING: N/A

CIRCULAR MIL AREA: 76.3-96.3mm² [150,500-190,000] SOLID OR STRANDED

THIS DRAWING IS A CONTROLLED DOCUMENT.

DIMENSIONS: MM [INCHES]

TOLERANCES UNLESS OTHERWISE SPECIFIED:

0 PLC	± -
1 PLC	± -
2 PLC	± 0.25 [.010]
3 PLC	± -
4 PLC	± -
ANGLES	± 5°

MATERIAL - 4

FINISH - 5

DWN	jr ruth	26JAN10
CHK	TOM MICHIELUTTI	26JAN10
APVD	TOM MICHIELUTTI	26JAN10
PRODUCT SPEC	—	
APPLICATION SPEC	—	
WEIGHT	—	

Tyco Electronics

Tyco Electronics Corporation
Harrisburg, PA 17105-3608

NAME: TERMINAL, RING TONGUE, SOLISTRAND
—

SIZE	CAGE CODE	DRAWING NO	RESTRICTED TO
A3	00779	C-160003	—

CUSTOMER DRAWING

SCALE	SHEET	REV
3:1	1 OF 1	A1