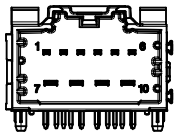

OPTION 'A'

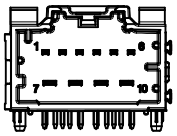

OPTION 'B'

MATERIAL NUMBER		CKT SIZE	DESCRIPTION	POL	COLOR
TUBE PACK	TRAY PACK				
34696-9100	34696-0100	10	POWER STAC RIGHT ANGLE HEADER ASSEMBLY	A	BLACK
34696-9101	34696-0101	10	POWER STAC RIGHT ANGLE HEADER ASSEMBLY	B	GREY

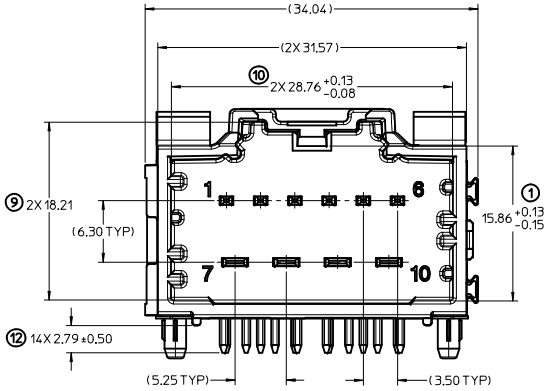

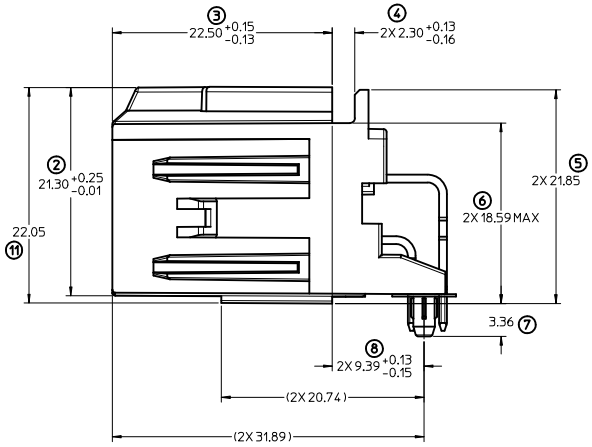

RECOMMENDED PCB LAYOUT

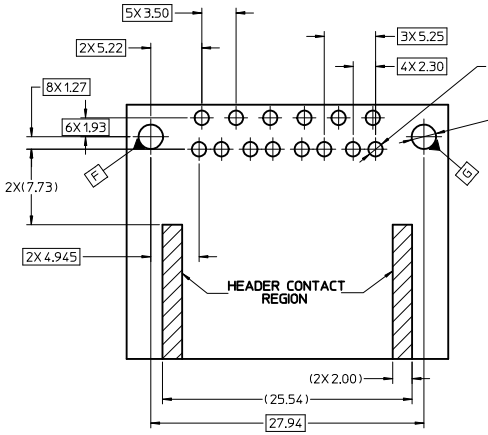

CONNECTOR MATE SIDE

POST HOLE TABLE

FOR DIM E:	
PRESS FIT	Ø2.60
DROP IN	Ø3.05

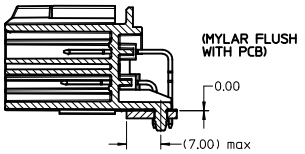

PANEL MOUNTING HEADER-TO-PCB SCALE 2:1

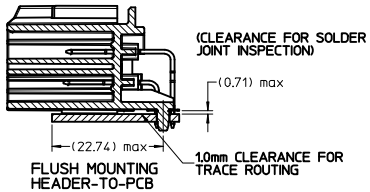

FLUSH MOUNTING HEADER-TO-PCB SCALE 2:1

* RECOMMENDED FOR PIN THROUGH PASTE REFLOW PROCESSING *

NOTES: VALID UNLESS OTHERWISE SPECIFIED

1. GENERAL:

a. CONNECTOR HEADER MUST BE VALIDATED TO THE FOLLOWING FUNCTIONAL REQUIREMENTS:

PIN RETENTION = USCAR-2 REV 4

SOLDERABILITY = SMES-152

b. APPLICATION REQUIREMENTS (REFERENCE ONLY) FOR:

SEE APPLICATION SPECIFICATION = AS-34690-000

SEE PRODUCT SPECIFICATION = PS-31372-100

MATES WITH: SD-31372-900

c. PACKAGING SPECIFICATION PER MOLEX DRAWING PK-31300-892

2. DESIGN: MATERIALS:

a. SHROUD (PLASTIC HOUSING):
RESIN - SPS 30%GF

b. 1.50mm BLADES:
BASE MATERIAL: C19400
PLATING TYPE: AS NOTED

2.80mm BLADES:
BASE MATERIAL: C19400
PLATING TYPE: AS NOTED

c. PIN ALIGNMENT PLATE: MYLAR

3. PLATING REQUIREMENTS:

a. UNDERPLATING - OVERALL NICKEL

b. OVERPLATING - OVERALL TIN

UPDATED DIMENSIONS
EC NO: UAU2010-1245 2009/12/04
DRWN: IDUNAJ 2009/12/04
CH'KD: 2009/12/04
APPR: SMARCEAU
DESCRIPTION
REV F1

QUALITY SYMBOLS
▼=0
▽=0

GENERAL TOLERANCES (UNLESS SPECIFIED)

	mm	INCH
4 PLACES	± ---	± ---
3 PLACES	± ---	± ---
2 PLACES	± 0.13	± ---
1 PLACE	± 0.25	± ---
ANGULAR ± 3 °		

DRAFT WHERE APPLICABLE MUST REMAIN WITHIN DIMENSIONS

DIMENSION STYLE: MM ONLY
SCALE: 4:1
DESIGN UNITS: METRIC
THIRD ANGLE PROJECTION

DRAWN BY: MBAILEY DATE: 10/02/06
CHECKED BY: CDILLON DATE: 04/18/07
APPROVED BY: DATE

TITLE: STAC64 SINGLE BAY R/A 10 CKT. HEADER ASSEMBLY SALES DRAWING

molex MOLEX INCORPORATED

MATERIAL NO.: SEE CHART
DOCUMENT NO.: SD-34696-100
SHEET NO.: 1 OF 1
SIZE: D

THIS DRAWING CONTAINS INFORMATION THAT IS PROPRIETARY TO MOLEX INCORPORATED AND SHOULD NOT BE USED WITHOUT WRITTEN PERMISSION

tb_frame_D_P_AM_T
Rev. E 2006/04/15