DO NOT SCALE | METRIC | THIRD ANGLE PROJECTION

DIMENSIONS IN mm

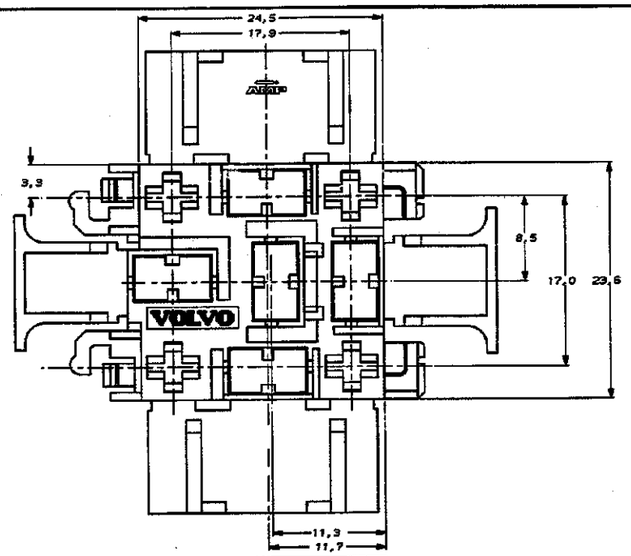

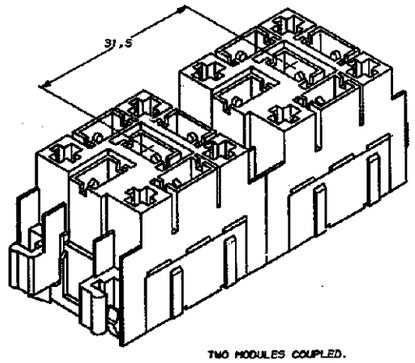

TWO MODULES COUPLED.

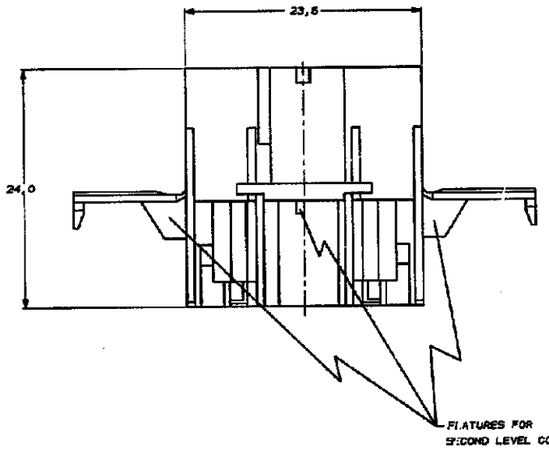

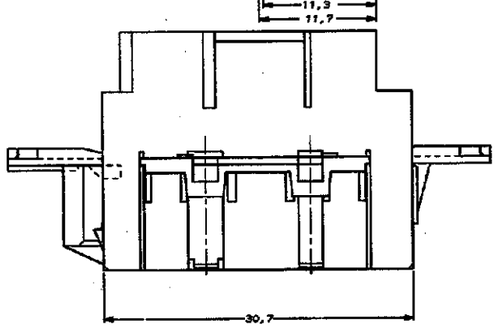

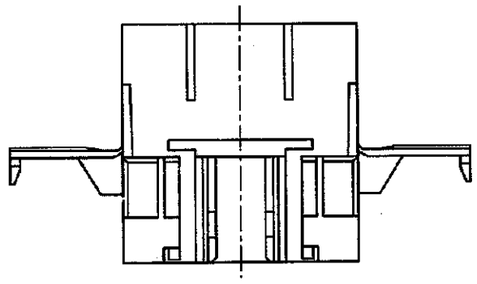

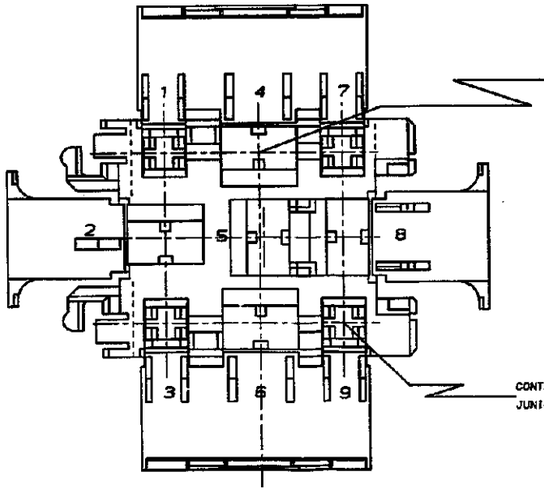

CONTACT-CAVITY SUITABLE FOR
POSITIVE LOCK CONTACTS.

CONTACT-CAVITY SUITABLE FOR
JUNIOR TIMER AND JUNIOR POWER TIMER CONTACTS.

DOC. CENTRE
13 SEP. 1991

		BLACK		PA-6	215754-3
		YELLOW		PA-6	215754-4
		RED		PA-6	215754-1
		NATURAL		PA-6	215754-0
		COLOUR		MATERIAL	PART NUMBER
—	—	—	—	—	
—	—	—	—	—	
—	—	—	—	—	
—	—	—	—	—	
—	—	—	—	—	
—	—	—	—	—	
D	H-9069	P.B.	A.S.	97.05.30	
LTR.	REVISION RECORD	DR.	CHK.	DATE	

CUSTOMER DRAWING — FOR REFERENCE ONLY WILL NOT BE UPDATED

© COPYRIGHT 19— BY AMP-HOLLAND B.V.
ALL INTERNATIONAL RIGHTS RESERVED. AMP PRODUCTS MAY BE COVERED BY U.S. AND FOREIGN AND/OR PATENTS PENDING.
THIS DRAWING IS UNPUBLISHED
RESTRICTED — PROPRIETARY

AMP — AMP-HOLLAND B.V. 's-Hertogenbosch, The Netherlands.

NAME: 9 POS. RELAYS MODULE

DR.: J. KLEEBAS DATE: 04-08-87 | CHK.: J. [illegible] DATE: 04-08-87 | APP.: L. V. [illegible] DATE: [illegible]

DWG. NO. C-215754 | REV. LTR. D | SHEET 1 of 1 | A1