NO	DESCRIPTION	DATE
1	BACKGROUND FORMAT UPDATED	09.29.08'
2	DEL CABLE RETENTION	06.17.10'
3	DEL INTERFACE	08.04.11'
4	DEL PROOF VOLTAGE ; ADD VSWR WORKING VOLTAGE → VOLTAGE RATING	04.30.13'

TYPE	ID
A	$\varnothing 1^{+0.1}_{-0}$ (.039$^{+.004}_{-0}$)

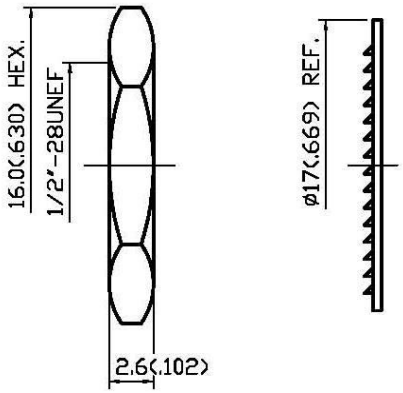

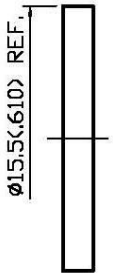

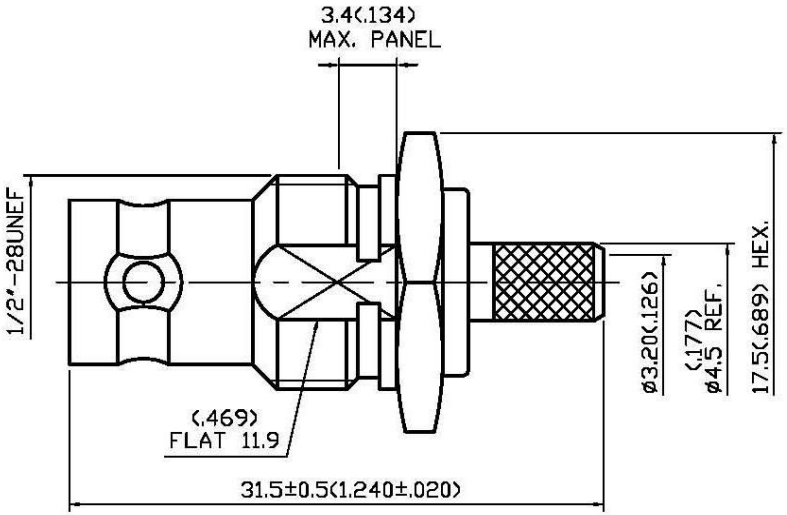

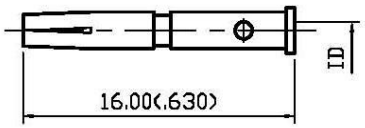

1.0 ELECTRICAL

1.1 FREQUENCY RANGE: DC–4 GHz
1.2 NOMINAL IMPEDANCE: 50 OHMS
1.3 VOLTAGE RATING: 500 VOLTS MAX. 4
1.4 VSWR: 1.5 MAX. @3 GHz 4

2.0 MATERIALS

2.1 BODIES: BRASS PER JIS–C3604
2.2 CENTER CONTACT: BERYLLIUM COPPER PER ASTM B196 UNS C17300
2.3 INSULATION: TEFLON PER ASTM D1457 AND ASTM D1710
2.4 CRIMP FERRULE: BRASS PER JIS–C2700

3.0 FINISHES AND OTHERS

3.1 SEE BELOW TABLE FOR DETAILS.

4.0 MECHANICAL

4.1 FOR USE WITH RG58U OR SIMILAR STYLE CABLE
4.2 CABLE ATTACHMENT: OUTER: CRIMP, INNER: SOLDER/CRIMP
4.3 CRIMP SIZE REQUIRED: CONTACT: 1.8(.071) HEX. CRIMP TOOL
FERRULE: 5.5(.216) HEX. CRIMP TOOL

5.0 ENVIRONMENTAL

5.1 OPERATING TEMPERATURE RANGE: –65° C TO +165° C

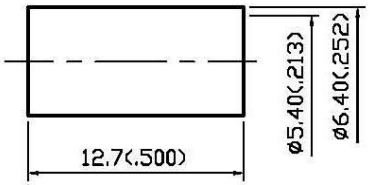

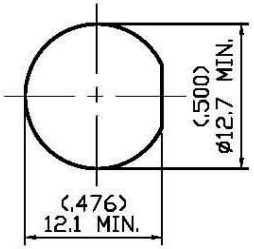

MOUNTING HOLE

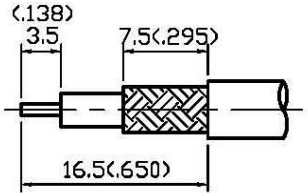

STRIPPING DIMENSION

8	CENTER CONTACT	BERYLLIUM COPPER	1	SILVER 70μ" MIN.
7	CRIMP FERRULE	BRASS	1	SILVER 70μ" MIN.
6	CHASSIS	BRASS	1	SILVER 70μ" MIN.
5	GASKET	SILICONE	1	NONE
4	INSULATION	TEFLON	1	NONE
3	BODY	BRASS	1	SILVER 70μ" MIN.
2	WASHER	STEEL	1	SILVER 70μ" MIN.
1	NUT	BRASS	1	SILVER 70μ" MIN.
NO	*DESCRIPTION*	*MATERIAL*	*Q'TY*	*FINISH*

APPROVED by _____ DATE: _____

DESCRIPTION	BNC STRAIGHT BULKHEAD JACK CRIMP										
製圖	DRAWN *Yoko*	TOLERANCE		品名 TITLE	13-11 T.S.S 58U (50Ω) \ROHS COMPLIANT		日期	DATE 01.15.92'	版次	REV. B-4	
		.X	±0.2								
檢圖	CHECK *Arc*	.XX	±0.1	單位	UNIT mm(in)	DWG.NO.	13-0106				
		.XXX	±0.05								
認定	APPROVAL *Jenny*	ANGLE	±5°	比例	SCALE 3:1						