DWG. NO. SD-3191-12R1-*

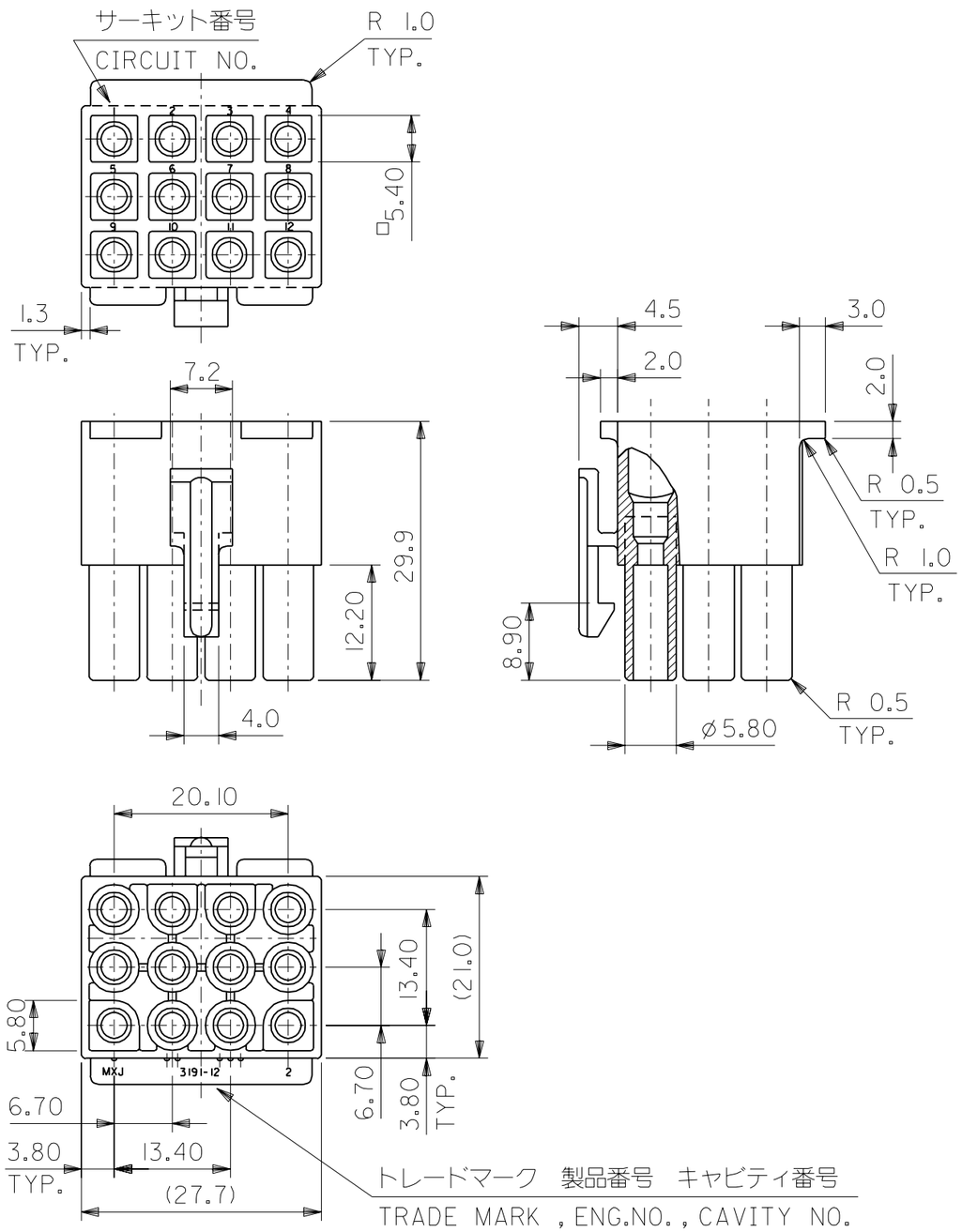

注)
NOTE.

1.( ) 内寸法は参考
(DIMENSIONS IN ( ) ARE REFERENCE)

3191-12R1-201	39-03-6125	ナイロン66 NYLON66	94V-0
3191-12R1	39-03-6124	ナイロン66 NYLON66	94V-2
ENG.NO.	EDP.NO.	材料 MATERIAL NO.	

14 NO.			
13 NO.			
12 NO.			
11 NO.			
10 NO.	JC2000-0626		
DRWN:	K.KOHAMA	'00/ 3/28	REDRAWN
CH'K:	T.YAMAGUCHI	'00/ 3/31	
APPR:	M.FUKUSHIMA	'00/ 3/31	
REV			DESCRIPTION

MATERIAL 材料: 表参照 SEE TABLE

FINISH 仕上げ: —//—

WIRE RANGE 適用電線範囲: —//—

INS. RANGE 被覆外径: —//—

GENERAL TOLERANCES: (UNLESS SPECIFIED) 一般公差

10 UNDER 未満	±0.25 ~~±0.2~~
10 OVER 以上 30 UNDER 未満	±0.3 ~~±0.25~~
30 OVER 以上	±0.35 ~~±0.3~~
ANGLE 角度	±3°

SCALE —//— | DESIGN UNITS ☒mm ☐INCH | THIRD ANGLE PROJECTION | DIMENSIONS: ☐mm/INCH ☐INCH/mm ☒mm ONLY | SHT | REV

DRAWN BY & DATE: K.KOHAMA '00/ 3/28
CHECKED BY & DATE: T.YAMAGUCHI '00/ 3/31
APPROVED BY & DATE: M.FUKUSHIMA '00/ 3/31

TITLE: 12 CKT. REC. HS'G (.093 DIA. TERM.)

molex MOLEX INCORPORATED

CAD FILENAME: S319112.S10 | MATERIAL NO.: 3191-12R1-* | DRAWING NO.: SD-3191-12R1-* | SHEET NO.: 1

THIS DRAWING CONTAINS INFORMATION THAT IS PROPRIETARY TO MOLEX INCORPORATED AND SHOULD NOT BE USED WITHOUT WRITTEN PERMISSION.

SIZE B

DO NOT SCALE DRAWING

S319112.S10

EN-02J(097) MXJ-54