Alle Rechte vorbehalten/ *All rights reserved*

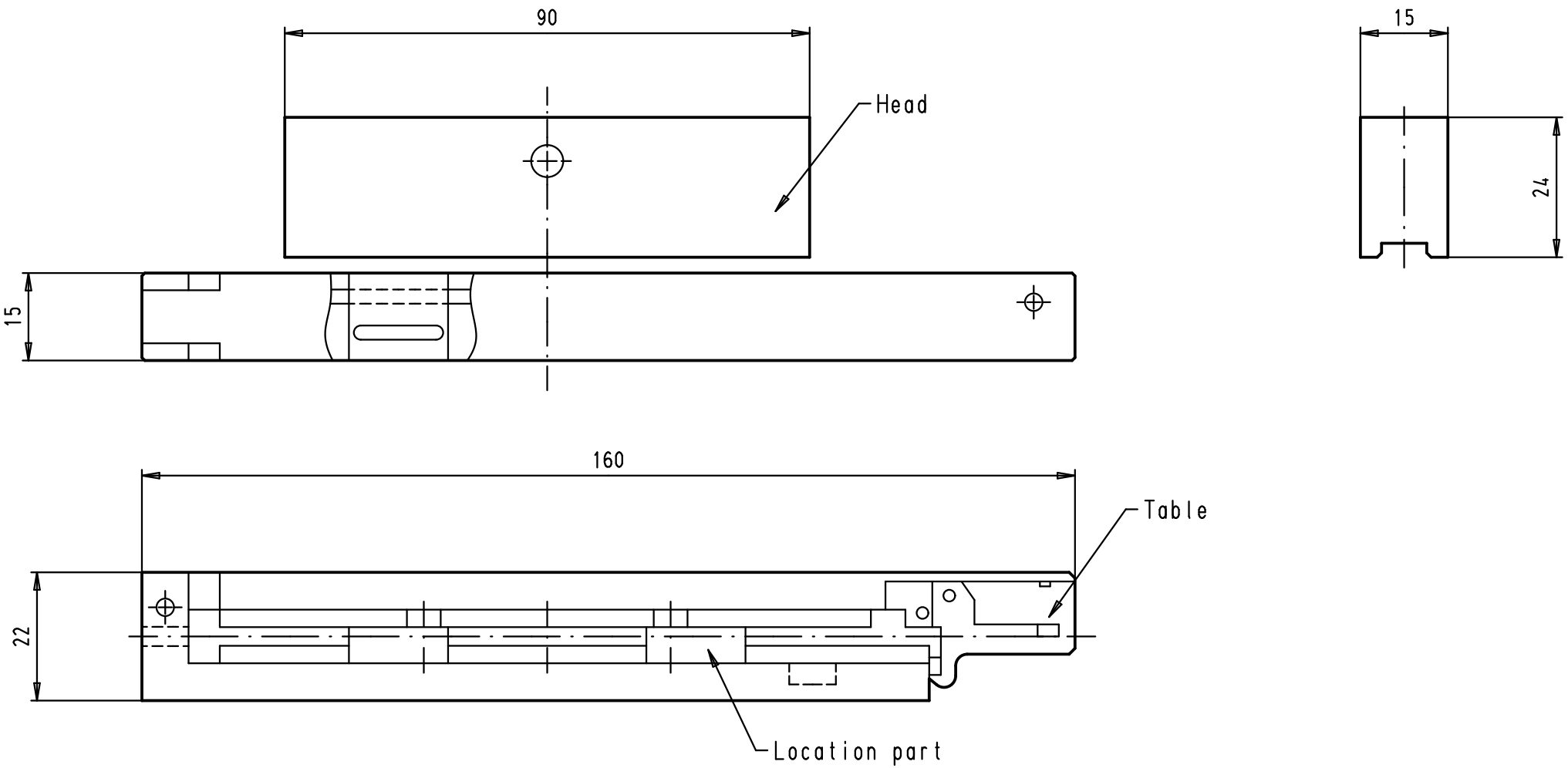

				Dat.	Name	All Dim. in mm Orig. Size DIN A 4	Har-mik tools Head and table for male bellows connector	Maßstab/ *Scale*
			Detail.	20/08/02	YT			1:1
			Insp.					
			Stand.					
35278	28/08/08	PK	HARTING EURL F-95972 Paris				TB 60 99 000 0016	Blatt/ *Page* 1/1
31074	20/08/02	YT						
Mod.	Dat.	Name					Sub.	