- Solutions for Electronic Specialty Markets (ESM)
  - Product Catalog for Electronic Specialty Markets
    - 3M™ Electronic Specialty Markets - New Product Releases
    - 3M™ Abrasives
    - 3M™ Adhesives, Cleaners & Compounds
    - 3M™ Breadboards & Test Clips
    - 3M™ Cable & Assemblies
    - 3M™ Copper Interconnects
    - 3M™ Fiber Optics
    - 3M™ Fire Protection
    - 3M™ Heat Shrink
    - 3M™ Identification Systems
    - 3M™ Occupational Health & Safety Products
    - 3M™ Protective Bumpers
    - 3M™ Reclosable Fasteners
    - 3M™ Splicing, Terminating & Ducting
    - 3M™ Static Control
    - 3M™ Tapes
    - 3M™ Terminals, Kits & Tools
    - 3M™ Vacuums & Accessories
    - 3M™ Warehousing & Packaging Supplies
    - 3M™ Wire Connectors

Product Catalog for Electronic Specialty Markets › 3M™ Copper Interconnects › Card-Edge Connectors, .100 in ›

Printer-friendly format

3M™ .100 in. Wiremount Connectors, Card-Edge w/o Mounting Flange, 3368-0001

[click to enlarge]

.100", 16 contacts, Card-Edge without Mounting Flange. Available options are 3448-53 Strain Relief and 3439-2 Keying Plug, ordered separately.

GTIN(UPC/EAN) : 0 00 54007 34296 0
3M Id : 80-6101-3229-4

Additional Information

Learn More . . .

Packaging Data
3M™ .100 in. Card-Edge Connector w/o Mounting Flng, ts0010 - Data Sheet (PDF 192.6 K)

Please Note:
Adobe® Acrobat® Reader is required to view PDF documents.

Get Acrobat Reader

Characteristics

China RoHS - Below MCV	Yes
Conductor Accommodation	26 & 28 AWG Solid or Stranded
Contact Material	Copper Alloy
Contact Termination Area Plating	None
Contact Underplating	100 µ" [2.54 µm] Nickel
Contact Wiping Area Plating	30 µ" [0.76 µm] Gold
Current Rating	1 Ampere
EPC Can View	Public
EU RoHS Compliant	Yes
Insulation Color	Gray
Insulation Flammability Rating	UL 94V-0
Insulation Material	Glass Filled Polyester (PBT)
Insulation Resistance	>1 X 10^9 Ohms @ 500 Vdc

Interface Grid	.100"
Interface Style	Card-Edge
Markings	3M Logo, Part Identification Number
Mounting Option	None
Non-Operating Temperature	-55 to 105 Degree Celsius
Number of Contact Rows	2
Number of Contacts	16
Pitch	0.100 Inch
Polarization	None
Primary Trademark Name	3M
Separable	Yes
Termination Method	Insulation Displacement
Termination Style	Multiple Wires
Underplating and U-Slot	100 microinches [2.54 micrometers] Nickel-QQ-N-290, Class 2
Withstanding Voltage	1000 Vrms at Sea Level

©3M 1995-2006 Legal Information Privacy Policy

3M™ Card-Edge

.100″ Without Mounting Flange 3000 Series

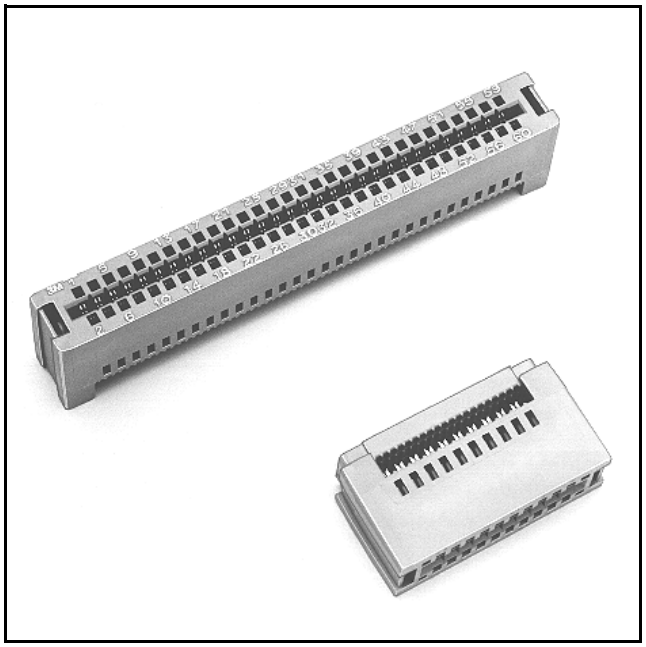

- Reinforced card-edge resists mouth bowing for consistent contact performance
- Metal cover clips provide superior cover retention
- Bifurcated contacts provide reliable contact with PC boards
- Keying plug 3439-2 provides polarization and/ or keying
- Optional strain relief
- RoHS* compliant

Date Modified: February 20, 2007

TS-0010-14
Sheet 1 of 3

Physical

Insulation	
Material:	Glass Filled Polyester (PBT)
Flammability:	UL 94V-0
Color:	Gray
Contact	
Material:	Copper Alloy
Cover Clip	
Material:	Stainless Steel
Plating:	
Underplating and U-Slot:	100 μ″ [2.54 μm] Nickel
Wiping Area::	30 μ″ [0.76 μm] Gold
Wire Accommodation:	26 and 28 AWG Solid and Stranded
Marking:	3M Logo and Part Identification Number, Position Identification

Electrical

Current Rating:	1 A
Insulation Resistance:	$> 1 \times 10^9 \Omega$ at 500 V_{DC}
Withstanding Voltage:	1000 V_{RMS} at Sea Level

Environmental

Temperature Rating:	-55°C to +105°C

*"RoHS compliant" means that the product or part does not contain any of the following substances in excess of the following maximum concentration values in any homogeneous material, unless the substance is in an application that is exempt under RoHS: (a) 0.1% (by weight) for lead, mercury, hexavalent chromium, polybrominated biphenyls or polybrominated diphenyl ethers; or (b) 0.01% (by weight) for cadmium. Unless otherwise stated by 3M in writing, this information represents 3M's knowledge and belief based upon information provided by third party suppliers to 3M.

UL File No.: E68080

3M is a trademark of 3M Company.

3M™ Card-Edge

.100″ Without Mounting Flange

3000 Series

Contact Quantity	3M Part Number	Strain Relief Part Number	Dimensions				
			A	A_2	B	C	D
10	**3358**	**3448-52**	0.96 [24.4]	0.97 [24.6]	0.85 [21.6]	0.612 [15.54]	0.95 [24.1]
16	**3368**	**3448-53**	1.26 [32.0]	1.27 [32.3]	1.15 [29.2]	0.912 [23.16]	1.25 [31.8]
20	**3461**	**3448-54**	1.46 [37.1]	1.47 [37.3]	1.35 [34.3]	1.112 [28.24]	1.45 [36.8]
26	**3462**	**3448-55**	1.76 [44.7]	1.77 [45.0]	1.65 [41.9]	1.412 [35.86]	1.75 [44.5]
34	**3463**	**3448-56**	2.16 [54.9]	2.17 [55.1]	2.05 [52.1]	1.812 [46.02]	2.15 [54.6]
40	**3464**	**3448-57**	2.46 [62.5]	2.47 [62.7]	2.35 [59.7]	2.112 [53.64]	2.45 [62.2]
50	**3415**	**3448-58**	2.96 [75.2]	2.97 [75.4]	2.85 [72.4]	2.612 [66.34]	2.95 [74.9]
60	**3666**	**3448-31**	3.46 [87.9]	3.47 [88.1]	3.35 [85.1]	3.112 [79.04]	3.45 [87.6]
64	**3403**	**3448-59**	3.66 [93.0]	3.67 [93.2]	3.55 [90.2]	3.312 [84.12]	3.65 [92.7]

Inch
[mm]

Tolerance Unless Noted			
	.0	.00	.000
inch	±.1	±.01	±.005

[ ] Dimensions for Reference Only

Connector Body

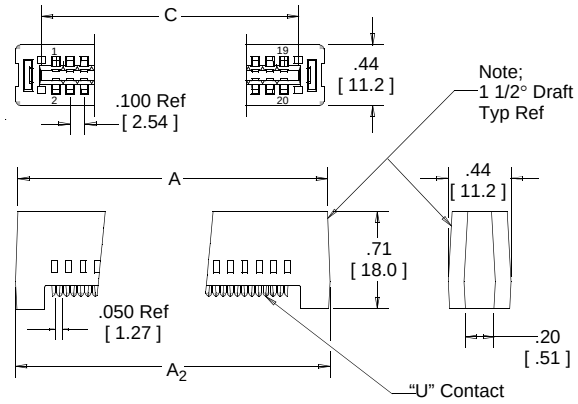

Connector Cover

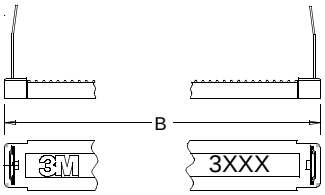

OptionalStrain Relief
(Order Separately)

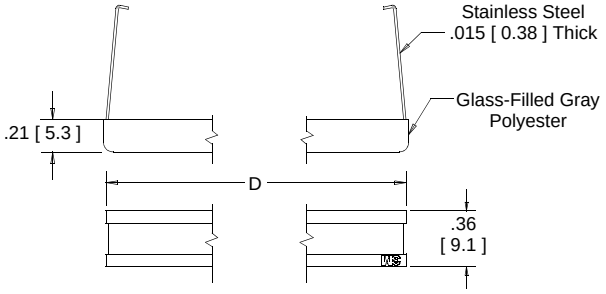

Assembled Height

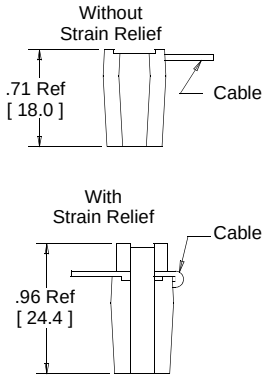

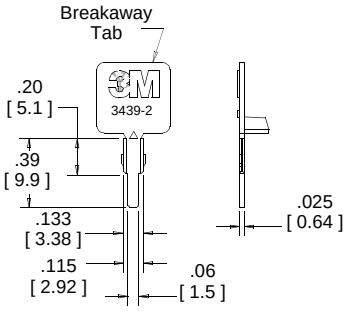

Optional
Keying Plug
Material-Glass Filled
Polyester

Ordering Information

XXXX-0001

3M Part Number:
See Table

Application tools: 3M™ 3640 press (or equivalent), 3M™ 3443-63 locator plate, 3M™ 3442-30.

TS-0010-14
Sheet 2 of 3

3M is a trademark of 3M Company.

Contact Quantity	3M Part Number	Dimension A ± .005	B (multiple ref.)
10	3358	0.595 [15.11]	4
16	3368	0.895 [22.73]	7
20	3461	1.095 [27.81]	9
26	3462	1.395 [35.43]	12
34	3463	1.795 [45.59]	16
40	3464	2.095 [53.21]	19
50	3415	2.595 [65.91]	24
60	3666	3.095 [78.61]	29
64	3403	3.295 [83.69]	31

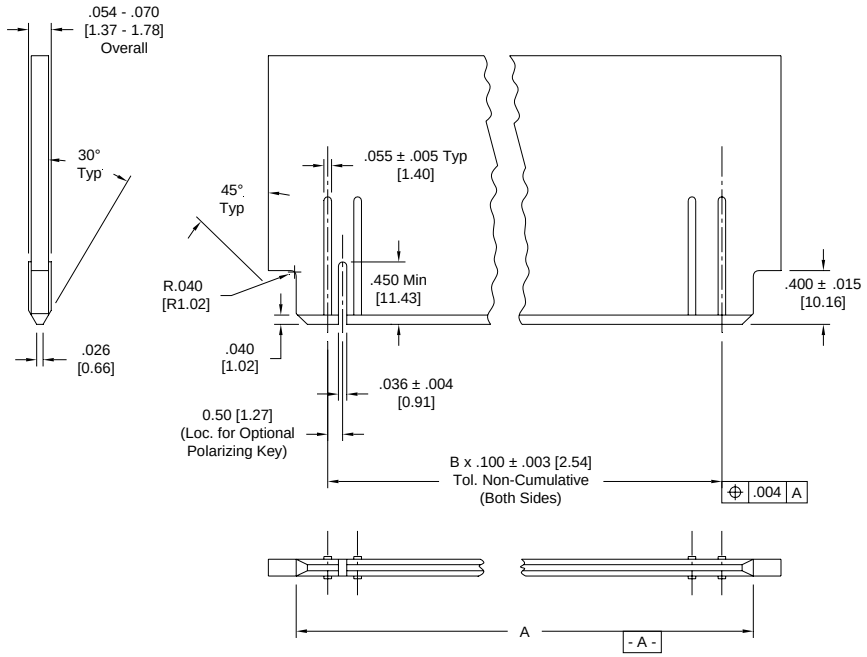

Recommended PCB Layout

TS-0010-14
Sheet 3 of 3

3M is a trademark of 3M Company.
For technical, sales or ordering information call
800-225-5373