Multi-tier terminal blocks with tension spring connection

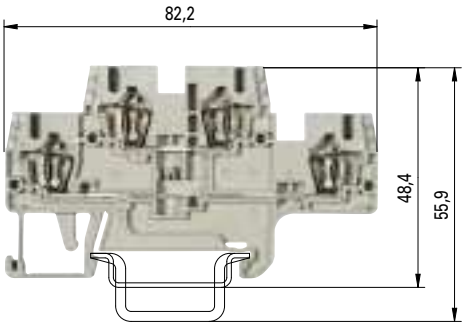

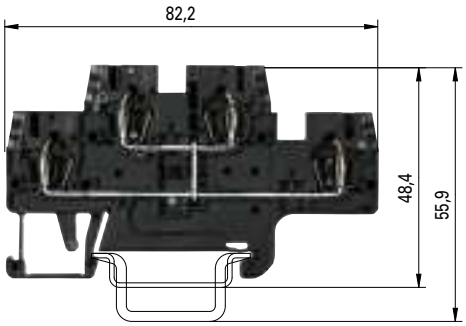

	WKFN 2,5 E/35 WKFN 2,5 E/N/D/35			WKFN 2,5 E/VB/35		
0344 Ⓔx II 2GD IM2	fine-stranded	solid	V	fine-stranded	solid	V
Ex e I/II	0.13–2.5 mm²	0.13–4 mm²	500 V/6 kV/3	0.13–2.5 mm²	0.13–4 mm²	500 V/6 kV/3
EN 60 947-7-1:2002	No. 22-12 AWG		300 V	No. 22-12 AWG		600 V
UL ratings field/factory wiring	No. 24-12 AWG		300 V	No. 24-12 AWG		600 V
CSA ratings	0.2–2.5 mm²	0.13–4 mm²	440/275*	0.2–2.5 mm²	0.13–4 mm²	440
PTB 04 ATEX 1051 U[1] EN 60 079-0/EN 60 079-7	5 mm		11 mm	5 mm		11 mm
Width Wire strip length						
Approvals						

		Type	Part No.	Std. Pack	Type	Part No.	Std. Pack
Multi-tier block	gray	WKFN 2,5 E/35	56.703.7055.0	100			
Multi-tier block, vertically connected	black				WKFN 2,5 E/VB/35	56.703.6955.1	100
Multi-tier block, combined	gray	WKFN 2,5 E/N/D/35	56.703.7655.0	100			
Multi-tier block, combined	gray						
Multi-tier ground block	green/yellow						
Accessories							
1. Mounting rail 35, 7.5 mm high	L = 2 m	35x27x7,5 EN 60715	98.300.0000.0	1	35x27x7,5 EN 60715	98.300.0000.0	1
Mounting rail 35, 15 mm high	L = 2 m	35x27x15 EN 60715	98.370.0000.0	1	35x27x15 EN 60715	98.370.0000.0	1
2. End clamp TS 35, with screw	8 mm wide	9708/2 S35	Z5.522.8553.0	100	9708/2 S35	Z5.522.8553.0	100
End clamp TS 35, without screw	8 mm wide	WEF 1/35	Z5.523.9353.0	100	WEF 1/35	Z5.523.9353.0	100
3. End plate	gray	APFN 2,5 E	07.312.7355.0	10	APFN 2,5 E	07.312.7355.0	10
	blue						
4. Partition plate	gray	TWFN 2,5 E	07.312.7455.0	10	TWFN 2,5 E	07.312.7455.0	10
5. Cross connector	2 pole	IVB WKF 2,5–2	Z7.280.6227.0	10	IVB WKF 2,5–2	Z7.280.6227.0	10
insulated	3 pole	IVB WKF 2,5–3	Z7.280.6327.0	10	IVB WKF 2,5–3	Z7.280.6327.0	10
	4 pole	IVB WKF 2,5–4	Z7.280.6427.0	10	IVB WKF 2,5–4	Z7.280.6427.0	10
	5 pole	IVB WKF 2,5–5	Z7.280.6527.0	10	IVB WKF 2,5–5	Z7.280.6527.0	10
	10 pole	IVB WKF 2,5–10	Z7.280.7027.0	20	IVB WKF 2,5–10	Z7.280.7027.0	20
	20 pole	IVB WKF 2,5–20	Z7.280.8027.0	20	IVB WKF 2,5–20	Z7.280.8027.0	20
Vertical cross connector	1 pole	IVB WKF–V	Z7.261.1127.0	10	IVB WKF–V	Z7.261.1127.0	10
6. Wire entry guide	0.13–0.2 mm²	LELN 2,5/1 WEISS	05.564.3755.0	100	LELN 2,5/1 WEISS	05.564.3755.0	100
	0.25–0.5 mm²	LELN 2,5/2 GRAU	05.564.3855.0	100	LELN 2,5/2 GRAU	05.564.3855.0	100
	0.75–1.0 mm²	LELN 2,5/3 SCHWARZ	05.564.3955.0	100	LELN 2,5/3 SCHWARZ	05.564.3955.0	100
7. Cover with warning symbol over 4 blocks		ADFN 2,5/4 GELB	04.343.8353.8	10	ADFN 2,5/4 GELB	04.343.8353.8	10
8. Marking tag carrier, 2-fold		BT 5/2	04.243.0855.0	100	BT 5/2	04.243.0855.0	100
9. Test adapter, modular		PS WKC/F	Z1.299.9753.0	10	PS WKC/F	Z1.299.9753.0	10
10. Test plug		ST 2/2,3	Z5.553.2921.0	10	ST 2/2,3	Z5.553.2921.0	10
11. Screwdriver, uninsulated		DIN 5264 B 0,6x3,5	06.502.4000.0	5	DIN 5264 B 0,6x3,5	06.502.4000.0	5
Screwdriver, uninsulated, MINI		DIN 5264 B 0,6x3,5 M	06.502.5000.0	10	DIN 5264 B 0,6x3,5 M	06.502.5000.0	10
Marking accessories see page 77–81							

[1] Follow the Ex installation instructions

[2] 1. value at 40 K/2. value at 45 K

* When using cross connectors on the upper tier