DRAWING MADE IN AMERICAN PROJECTION

NUMBER C-160296-E

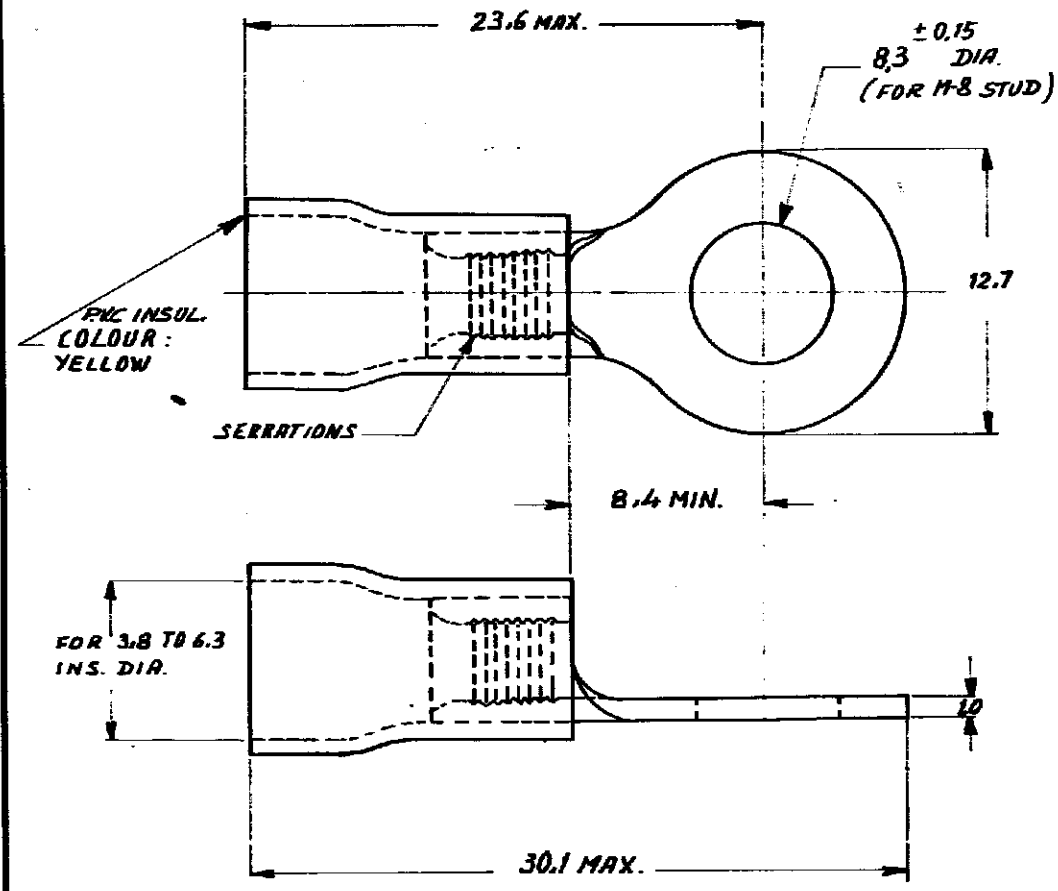


DIMENSIONS IN M.M. DO NOT SCALE PRINT

| | | |
|---|---|---|
| 2-160296-1 | 160296-0 | TAPE MOUNTED |
| 160296 | COPPER | TINPLATED |
| ORDER NO. | MATERIAL | PLATING |

DR A. CORPIANI 24/1-69 DATE | DE DATE
CHK DATE | APP 23/1-1969 DATE

**CUSTOMER COPY FOR REFERENCE ONLY**

©1969 BY AMP-HOLLAND N.V. ALL RIGHTS RESERVED A-MP PRODUCTS COVERED BY PATENTS AND/OR PATENTS PENDING.

AMP-HOLLAND N.V.
'S-HERTOGENBOSCH
HOLLAND

| WIRE-RANGE | INSUL.-RANGE | FIRST USED |
|---|---|---|
| 2.7-5.5 mm² | | |

| SCALE | LOC | SIZE | NO | REV |
|---|---|---|---|---|
| | H | A | C-160296-E | A |

NAME RINGTONGUE TYPE PLASTI-GRIP.

AMP 1252