MIC5528

High-Performance 500mA LDO in Extra Thin DFN Package

General Description

The MIC5528 is a low-power, µCap, low dropout regulator designed for optimal performance in a very-small footprint. It is capable of sourcing up to 500mA of output current while only drawing 38µA of operating current. This high-performance LDO is a µCap design in a thermally enhanced 1.2mm × 1.2mm extra thin (0.4mm ht.) DFN package. It operates with small ceramic output capacitor for stability, thereby reducing required board space.

Ideal for battery-operated applications, the MIC5528 offers ±2% accuracy, extremely low dropout voltage (260mV @ 500mA), and can regulate output voltages down to 1.0V. Equipped with a TTL logic-compatible enable pin, the MIC5528 can be put into a zero-off-mode current state, drawing no current when disabled.

The MIC5528 is a µCap design, operating with very small ceramic output capacitors for stability, reducing required board space and component cost for space-critical applications. The MIC5528 has an operating junction temperature range of –40°C to 125°C.

Datasheets and support documentation are available on Micrel's web site at: www.micrel.com.

Features

- Input voltage range: 2.5V to 5.5V
- Fixed output voltages down to 1.0V
- ±2% Room temperature accuracy
- Low quiescent current 38µA
- Stable with 2.2µF ceramic output capacitors
- Low dropout voltage 260mV @ 500mA
- Auto discharge and internal enable pulldown
- Thermal-shutdown and current-limit protection
- 6-pin 1.2mm x 1.2mm extra thin DFN package

Applications

- Portable communication equipment
- DSC, GPS, PMP, and PDAs
- Portable medical devices
- 5V POL applications

Typical Application

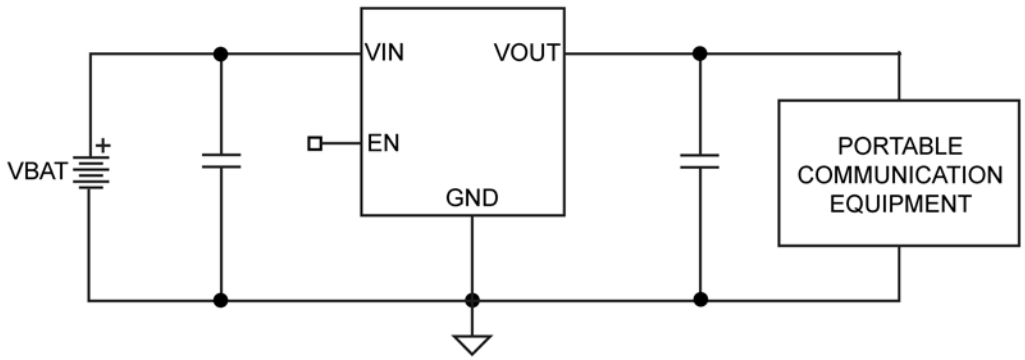

Absolute Maximum Ratings[1]

Supply Voltage (V_{IN}) ..... –0.3V to 6V
Enable Voltage (V_{EN}) ..... –0.3V to V_{IN}
Power Dissipation (P_D) ..... Internally Limited[3]
Lead Temperature (soldering, 10s) ..... 260°C
Junction Temperature (T_J) ..... –40°C to +150°C
Storage Temperature (T_s) ..... –65°C to +150°C
ESD Rating[4] 3kV

Operating Ratings[2]

Supply Voltage (V_{IN}) ..... 2.5V to 5.5V
Enable Voltage (V_{EN}) ..... 0V to V_{IN}
Junction Temperature (T_J) ..... –40°C to +125°C
Junction Thermal Resistance
1.2mm × 1.2mm Extra Thin DFN-6 (θ_{JA}) ..... 173°C/W

Ordering Information

Part Number	Marking Code	Output Voltage[5]	Auto-Discharge	EN Pulldown	Temperature Range
MIC5528-3.3YMX	CF	3.3V	YES	YES	–40°C to +125°C

Notes:

1. Exceeding the absolute maximum rating can damage the device.
2. The device is not guaranteed to function outside its operating rating.
3. The maximum allowable power dissipation of any T_A (ambient temperature) is $P_{D(max)} = (T_{J(max)} – T_A) / \theta_{JA}$. Exceeding the maximum allowable power dissipation will result in excessive die temperature, and the regulator will go into thermal shutdown.
4. Devices are ESD sensitive. Handling precautions are recommended. Human body model, 1.5kΩ in series with 100pF.
5. Other voltages available. Contact Micrel for details.

MICREL, INC. 2180 FORTUNE DRIVE SAN JOSE, CA 95131 USA
TEL +1 (408) 944-0800 FAX +1 (408) 474-1000 WEB http://www.micrel.com

Micrel makes no representations or warranties with respect to the accuracy or completeness of the information furnished in this data sheet. This information is not intended as a warranty and Micrel does not assume responsibility for its use. Micrel reserves the right to change circuitry, specifications and descriptions at any time without notice. No license, whether express, implied, arising by estoppel or otherwise, to any intellectual property rights is granted by this document. Except as provided in Micrel's terms and conditions of sale for such products, Micrel assumes no liability whatsoever, and Micrel disclaims any express or implied warranty relating to the sale and/or use of Micrel products including liability or warranties relating to fitness for a particular purpose, merchantability, or infringement of any patent, copyright or other intellectual property right.

© 2013 Micrel, Incorporated.