MALE END VIEW

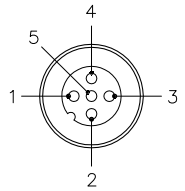

1 = BROWN
2 = WHITE
3 = BLUE
4 = BLACK
5 = GRAY

euro fast.

SPECIFICATIONS

CONTACT CARRIER MATERIAL/COLOR	NYLON OR TPU/YELLOW
CONTACT MATERIAL/PLATING	BRASS/GOLD
HOUSING MATERIAL/PLATING	BRASS/NICKEL
O-RING MATERIAL	NBR 70
RATED CURRENT [A]	4.0 A
RATED VOLTAGE [V]	250 V
CONDUCTOR INSULATION MATERIAL	PVC
NUMBER OF CONDUCTORS [AWG]	5x22 AWG
TEMPERATURE RATING	-40°C to +80°C (-40°F to +176°F)
PROTECTION CLASS	MEETS NEMA 1,3,4,6P AND IEC IP68

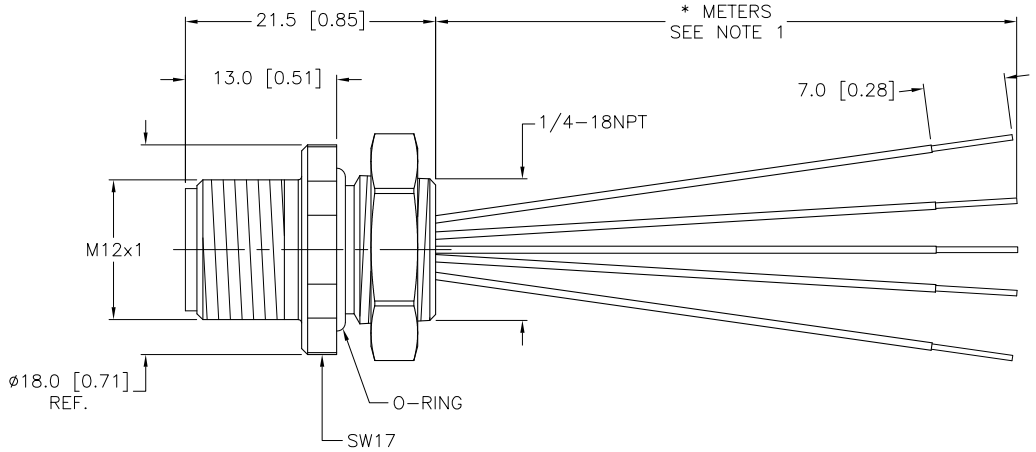

CABLE LENGTH	TOLERANCE
ALL LENGTHS	+ 4% (OR 50mm) OF LENGTH - 0% (OR 0mm) OF LENGTH WHICHEVER IS GREATER
STRIP LENGTH	**TOLERANCE**
0-7mm	±0.5mm
8-29mm	±1.0mm
30-49mm	±2.0mm
50-69mm	±3.0mm
70-100mm	±4.0mm
OVER 100mm	±5.0mm

SOURCE DRAWING - FOR REFERENCE ONLY

NOTES:

1. "*" DESIGNATES LEAD LENGTH IN METERS. CONTACT TURCK TO ORDER SPECIFIC LENGTHS.

REV	DESCRIPTION	BY	DATE	ECO NO.
C	DRAWING PROCESSED AS PART OF ECO 33971	CBM	04/06/11	33971

RELATED DOCUMENTS
1.
2.
3.
4.

3RD ANGLE PROJECTION

THIS DRAWING IS PROPERTY OF TURCK INC. USE OF THIS DOCUMENT WITHOUT WRITTEN PERMISSION IS PROHIBITED.

TURCK INC
High Technology Sensors and Automation Controls

3000 CAMPUS DRIVE
MINNEAPOLIS, MN 55441
1-800-544-7769
(763) 553-7300
(763) 553-0708 fax
turck.com

MATERIAL: SEE SPECIFICATIONS

FINISH: SEE SPECIFICATIONS

ALL DIMENSIONS DISPLAYED ON THIS DRAWING ARE FOR REFERENCE ONLY

CONTACT TURCK FOR MORE INFORMATION

DRFT: RWC | DATE: 05/06/05
DSGN: | SCALE: 1=.7

UNIT OF MEASUREMENT
MILLIMETER [INCH]
DO NOT SCALE THIS DRAWING

DESCRIPTION: FS 4.5-*/18.25

IDENTIFICATION NO.:

REV: C

FILE: 777003684

SHEET 1 OF 1