CY3267 PowerPSoC™ Lighting Evaluation Kit Guide

Spec. # 001-49266 Rev. **

Cypress Semiconductor
198 Champion Court
San Jose, CA 95134-1709

Phone (USA): 800.858.1810
Phone (Intnl): 408.943.2600
http://www.cypress.com

Copyrights

© Cypress Semiconductor Corporation, 2009. The information contained herein is subject to change without notice. Cypress Semiconductor Corporation assumes no responsibility for the use of any circuitry other than circuitry embodied in a Cypress product. Nor does it convey or imply any license under patent or other rights. Cypress products are not warranted nor intended to be used for medical, life support, life saving, critical control or safety applications, unless pursuant to an express written agreement with Cypress. Furthermore, Cypress does not authorize its products for use as critical components in life-support systems where a malfunction or failure may reasonably be expected to result in significant injury to the user. The inclusion of Cypress products in life-support systems application implies that the manufacturer assumes all risk of such use and in doing so indemnifies Cypress against all charges.

Any Source Code (software and/or firmware) is owned by Cypress Semiconductor Corporation (Cypress) and is protected by and subject to worldwide patent protection (United States and foreign), United States copyright laws and international treaty provisions. Cypress hereby grants to licensee a personal, non-exclusive, non-transferable license to copy, use, modify, create derivative works of, and compile the Cypress Source Code and derivative works for the sole purpose of creating custom software and or firmware in support of licensee product to be used only in conjunction with a Cypress integrated circuit as specified in the applicable agreement. Any reproduction, modification, translation, compilation, or representation of this Source Code except as specified above is prohibited without the express written permission of Cypress.

Disclaimer: CYPRESS MAKES NO WARRANTY OF ANY KIND, EXPRESS OR IMPLIED, WITH REGARD TO THIS MATERIAL, INCLUDING, BUT NOT LIMITED TO, THE IMPLIED WARRANTIES OF MERCHANTABILITY AND FITNESS FOR A PARTICULAR PURPOSE. Cypress reserves the right to make changes without further notice to the materials described herein. Cypress does not assume any liability arising out of the application or use of any product or circuit described herein. Cypress does not authorize its products for use as critical components in life-support systems where a malfunction or failure may reasonably be expected to result in significant injury to the user. The inclusion of Cypress' product in a life-support systems application implies that the manufacturer assumes all risk of such use and in doing so indemnifies Cypress against all charges.

Use may be limited by and subject to the applicable Cypress software license agreement.

PSoC Designer™, Programmable System-on-Chip™, and PSoC Express™ are trademarks and PSoC® is a registered trademark of Cypress Semiconductor Corp. All other trademarks or registered trademarks referenced herein are property of the respective corporations.

Flash Code Protection

Cypress products meet the specifications contained in their particular Cypress PSoC Data Sheets. Cypress believes that its family of PSoC products is one of the most secure families of its kind on the market today, regardless of how they are used. There may be methods, unknown to Cypress, that can breach the code protection features. Any of these methods, to our knowledge, would be dishonest and possibly illegal. Neither Cypress nor any other semiconductor manufacturer can guarantee the security of their code. Code protection does not mean that we are guaranteeing the product as "unbreakable."

Cypress is willing to work with the customer who is concerned about the integrity of their code. Code protection is constantly evolving. We at Cypress are committed to continuously improving the code protection features of our products.

Contents

1. Introduction **5**

1.1 Purpose 5
1.2 Kit Contents 5
1.3 Kit Features 6
1.4 Precautions 6
1.4.1 General Safety Precautions 6
1.4.2 Precautions when working with PowerPSoC based high-power circuits 7
1.5 Install Software 7
1.5.1 Install CY3267 Kit Software 7
1.5.2 Install latest version of PSoC Designer 5.0 7
1.5.3 Install latest version of PSoC Programmer 7
1.5.4 Install PSoC MiniProg1 8
1.6 Document Revision History 8
1.7 Documentation Conventions 8

2. Firmware **9**

3. Software **11**

3.1 Installation 12
3.1.1 Installation Requirements 12
3.1.2 Installing the Application 12
3.1.3 Uninstalling the Application 12
3.2 Representing Colors 12
3.3 LED Luminous Flux 14

4. Hardware **17**

4.1 Board Specification 17
4.1.1 Main Board 17
4.1.2 LED Daughter Board 18
4.2 Jumper Settings and Connector Descriptions 19
4.3 Floating Load Buck Topology 21
4.3.1 Board Wiring Instructions 22

1. Introduction

WARNING: HIGH BRIGHTNESS LEDs CAN CAUSE PERMANENT EYE DAMAGE!

Do not look at the LEDs if they are not covered by the optical diffuser. The LEDs illuminate at a very high intensity and can cause permanent eye damage if they are viewed without the optical diffuser.

WARNING: Generally all lab work in power electronics must be done with extreme care. Caution must be exercised when using power supplies and/or power related equipment.

1.1 Purpose

The CY3267 PowerPSoC™ Lighting Evaluation Kit enables designers to evaluate Cypress' PowerPSoC family of devices and demonstrates their ability to create scalable LED management solutions. The PowerPSoC devices feature high performance power electronics including 1A, 2 MHz power FETs, hysteretic controllers, current sense amplifiers, and PrISM™/PWM modulators to create a complete solution for LED power management.

Right out of the box, the CY3267 Kit can be used to evaluate PowerPSoC's ability to drive 4 LED channels (Red, Green, Blue and Amber) at the desired color and brightness output. Refer to the CY3267 Quick Start Guide for instructions on how to use the kit with the factory installed firmware.

Chapter 2 of this guide provides a detailed explanation of the factory installed firmware.

Chapter 3 describes the Intelligent Lighting Control GUI, along with installation instructions. This GUI can be used to select the desired color coordinates and intensity output when used along with the RGBA LED Daughter Card included with the kit.

Chapter 4 contains hardware setup information while using the CY3267 Kit to build example projects. This chapter also contains architectural and layout information of the PowerPSoC Main Board and the RGBA LED Daughter Card.

1.2 Kit Contents

- CY3267 PowerPSoC Main Board
- LED Daughter Board
- Wall-wart Power Supply
- Optical Diffuser
- Retractable USB Cable

- Lighting Evaluation Kit CD
  - Kit Guide and Quick Start Guide (located at CD Drive:*Documents*\)
  - Board Schematics, BOM, and Design Files (located at CD Drive:*Hardware*\)
  - Intelligent Lighting Control GUI Setup (located at CD Drive:*Software*\)
  - PowerPSoC default firmware source code (located at CD Drive:*Firmware**CY3267_PowerPSoC*\)
  - Kit default firmware hex files (located at CD Drive:*Firmware**Hex Files*\)
- Quick Start Guide Booklet
- PSoC Software Development Suite CD
  - PSoC Designer 5.0 Setup
  - PSoC Programmer 3.0

1.3 Kit Features

- Out-of-box evaluation experience using the PowerPSoC Main Board, RGBA LED daughter card and Intelligent Lighting Control GUI, all included in the kit.
- Kit default firmware demonstrates HB-LED control with intelligent color mixing using PowerPSoC.
- PC USB connectivity through on-board USB controller
- Screw terminals for flexible input voltage options (7V to 32V)
- Debug capability provided by the PowerPSoC On Chip Debugger (OCD) device and RJ-45 jack that connects to CY3215DK ICE Cube Emulation Kit.
- Interface to custom LED daughter boards through screw terminals from the PowerPSoC mother board
- CY3271 FirstTouch RF Kit Connector
- CyFi Radio Module Connector
- Access to all Function I/O pins of PowerPSoC for additional design and debug capability.

While the Main Board provides connectors for CY3271 FirstTouch RF Kit and the CyFi Radio Module, these are not enabled in the kit default firmware. You can also develop firmware to add a DMX512 or DALI interface to PowerPSoC and use the 5-pin header J12 to connect to a suitable external interface circuit.

1.4 Precautions

1.4.1 General Safety Precautions

1. Keep your work area clean. Ensure that there are no loose wires or metal pieces lying on the table or nearby high-power circuits.
2. Always wear safety glasses when working with circuits at high power or high voltage.
3. Use rubber floor mats to insulate you from ground.
4. Be aware of bracelets, rings, metal watch bands and loose necklace/pendants that you may be wearing. They conduct electricity and can cause burns. Do not wear them near an energized circuit.
5. Be aware of the locations of fire extinguishers and first aid kits in the lab and around your work area.

6. Use only isolated power supplies (either isolated or AC power through isolation power transformers).
7. Before applying power to your circuit, verify that all connections are correct as per the board schematic. Ensure that there are no shorts or ground loops that may lead to electrical shocks or damage the test equipment.

1.4.2 Precautions when working with PowerPSoC based high-power circuits

1. When building your own system with the CY3267 for the first time, begin with low current settings (preferably 50mA). Set the DAC thresholds in the PowerPSoC's hysteretic controller accordingly. After the system functions as desired at this current setting, increase the hysteretic controller's DAC thresholds in steady increments to the final value. At each increment, verify that the components on the board are not excessively hot.
2. Ensure that the high-side DAC reference and the low-side DAC reference differ by a count of at least four. For example, if the low-side DAC reference is set to 85 (decimal representation), the high-side DAC reference should be set to at least 89.
3. Follow the FET Turn-On sequence suggested in the example project. Altering this sequence may damage the PowerPSoC's internal FETs.

1.5 Install Software

1.5.1 Install CY3267 Kit Software

1. Insert the CY3267 PowerPSoC Lighting Evaluation Kit into your PC's CD ROM drive.
2. Locate the **Software** folder and launch *Intelligent Lighting Control.msi* file located inside it.
3. Follow the setup wizard instructions

1.5.2 Install latest version of PSoC Designer 5.0

Locate the **PSoC Software Development Suite** CD included along with the kit. This CD contains the install files for PSoC Designer 5.0 and PSoC Programmer 3.0.

Launch the setup file for PSoC Designer 5.0 and follow the wizard instructions to complete the installation.

Note that the software development environment for PowerPSoC family of devices is not available in PSoC Designer 4.4 or earlier versions. If you have one of these versions installed on your PC, uninstall them and install the latest build of PSoC Designer 5.0.

1.5.3 Install latest version of PSoC Programmer

Locate the **PSoC Software Development Suite** CD included along with the kit. This CD contains the install files for PSoC Designer 5.0 and PSoC Programmer 3.0.

Launch the setup file for PSoC Programmer 3.0 and follow the wizard instructions to complete the installation.

If PSoC Programmer is already installed on your PC, use the following instructions to update to the latest version.

1. Launch PSoC Programmer
2. Select **Help** > **About PSoC Programmer**
3. Note the version number and click **OK**

4. Click **Check for Updates**. PSoC Programmer launches your web browser and opens the PSoC Programmer website.
5. Compare the PSoC Programmer version number you noted in Step 3, to the latest version available on the website. If there is a newer version available, click **Download** and install the newest version.

Note that the PowerPSoC family of devices require PSoC Programmer 3.0 or higher.

1.5.4 Install PSoC MiniProg1

1. Ensure that all content on the **PSoC Software Development Suite** CD is installed.
2. Plug the MiniProg1 into your PC via the USB Cable. If this is the first time you have connected the PSoC MiniProg1, the Windows Found New Hardware Wizard opens. If this Wizard does not open, then the PSoC MiniProg1 software is already installed and you do not need to continue with these instructions.
3. Select **No, not this time** option button and click **Next**.
4. Select **Install from a list or specific location (Advanced)** option button and click **Next**.
5. Select **Don't search. I will choose the driver to install** option button and click **Next**.
6. Select **USB Mini Programmer** driver and click **Next**.
7. When prompted that the USB Mini Programmer software has not passed Windows Logo Testing, click **Continue Anyway**.
8. When Windows has completed the installation, click **Finish**.

1.6 Document Revision History

Table 1-1. Revision History

Revision	PDF Creation Date	Origin of Change	Description of Change
**	01/23/09	QUS	New Guide

1.7 Documentation Conventions

Table 1-2. Document Conventions for Guides

Convention	Usage
`Courier New`	Displays file locations, user entered text, and source code: `C:\...cd\icc\`
Italics	Displays file names and reference documentation: Read about the *sourcefile.hex* file in the *PSoC Designer User Guide*.
[**Bracketed, Bold**]	Displays keyboard commands in procedures: [**Enter**] or [**Ctrl**] [**C**]
File > Open	Represents menu paths: File > Open > New Project
Bold	Displays commands, menu paths, and icon names in procedures: Click the **File** icon and then click **Open**.
Times New Roman	Displays an equation: 2 + 2 = 4
Text in gray boxes	Describes Cautions or unique functionality of the product.

2. Firmware

WARNING: HIGH BRIGHTNESS LEDs CAN CAUSE PERMANENT EYE DAMAGE!

Do not look at the LEDs if they are not covered by the optical diffuser. The LEDs illuminate at a very high intensity and can cause permanent eye damage if they are viewed without the optical diffuser.

WARNING: Generally all lab work in power electronics must be done with extreme care. Caution must be exercised when using power supplies and/or power related equipment.

The CY3267 PowerPSoC Lighting Evaluation Kit ships with factory installed firmware that demonstrates the ability of PowerPSoC to drive multiple LED channels with color-mixing intelligence. The firmware also illustrates the use of PSoC Designer 5.0 to design PowerPSoC based systems and solutions.

The factory installed example project implements the following elements with PowerPSoC:

- I2C interface to receive the desired color coordinates and intensity information
- 4-channel LED dimming using PrISM™ technology
- Hysteretic current control, with switching current thresholds configured by DAC settings

The CY3267 provides an USB interface to a PC-based Intelligent Lighting Control GUI that enables users to select the desired color coordinate and intensity from the 1931 CIE Chart. The USB interface is implemented in CY8C24894, which communicates this data over I2C to the PowerPSoC.

The user selects the desired color using the Intelligent Lighting Control GUI or using the Capsense buttons on the Main Board. These inputs are captured by the firmware in CY8C29894 and transmitted to the PowerPSoC over an I2C interface. The PowerPSoC firmware receives the target color coordinates and calculates the intensities of each of the four individual colors (Red, Green, Blue, and Amber) using an intelligent color mixing algorithm. The PowerPSoC also implements the hysteretic current control loop along with dimming control to drive the LED.

The PSoC Designer source project for the PowerPSoC default firmware is located in the Lighting Evaluation Kit CD that accompanies this kit. Use the following path as reference:

CD Drive:*Firmware**CY3267_PowerPSoC*

Locate and open the file named *CY3267_PowerPSoC.app*. This launches the source project in PSoC Designer 5.0. Ensure that you have installed PSoC Designer 5.0 (available in the PSoC Software Development Suite CD) as per instructions in section Install latest version of PSoC Designer 5.0 on page 7.

3. Software

WARNING: HIGH BRIGHTNESS LEDs CAN CAUSE PERMANENT EYE DAMAGE!

Do not look at the LEDs if they are not covered by the optical diffuser. The LEDs illuminate at a very high intensity and can cause permanent eye damage if they are viewed without the optical diffuser.

WARNING: Generally all lab work in power electronics must be done with extreme care. Caution must be exercised when using power supplies and/or power related equipment.

The Intelligent Lighting Control application controls the CY3267 PowerPSoC Lighting Evaluation Kit over USB interface from a personal computer that is running either the Windows Vista (32-bit) or Windows XP (32-bit) operating system. The application's startup display, with a board attached and operating is shown in the following figure.

Figure 3-1. Intelligent Lighting Control - CIE Color Selection

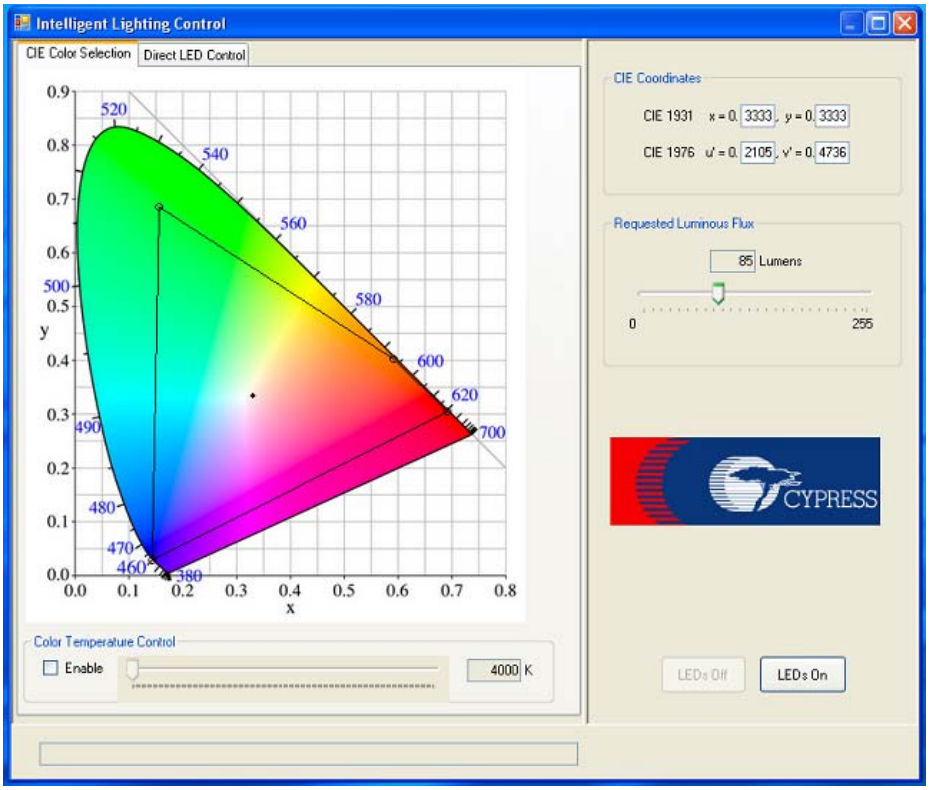

3.1 Installation

3.1.1 Installation Requirements

To use the application included with the CY3267 PowerPSoC Lighting Evaluation Kit, a personal computer running Windows Vista or Windows XP is required. The application runs under 32-bit XP or 32-bit Vista. The computer must have the minimum amount of memory required to run the desired version of Windows, and at least one megabyte of available disk storage. In addition, one available USB port is needed to connect the evaluation unit to the computer, using an A to mini-B USB cable.

3.1.2 Installing the Application

The Intelligent Lighting Control application is included on the kit CD. To install the application, do the following:

1. Open the CD *Drive:\Software* folder and click *Intelligent Lighting Control.msi* file. The application, along with a required .dll file (and .NET Framework 2.0, if it is not already installed), installs.
2. The Intelligent Lighting Control application and associated .dll file installs into the location *C:\Program Files\Cypress\Intelligent Lighting Control* on your computer's default disk, usually drive C.

3.1.3 Uninstalling the Application

To uninstall the application, do the following:

1. Run the Install program again and click **Remove Intelligent Lighting Control** button.
2. Click **Finish** button at the bottom right of the setup window.

3.2 Representing Colors

The application has two modes of control: a CIE Color Selection Mode and Direct LED Control Mode. These two modes are selected using tabs displayed on the upper left edge of the application window. The CIE Color Selection Mode is the active display when the application is started and is intended to be the most common mode used to control the CY3267. The colors that can be mixed are determined by the choice of LEDs used in the unit. The colors produced by individual LEDs are referred to as primary colors. All other colors are created by mixing these primary colors. Mixed colors appear the same to the eye as if produced by an LED with that color as its primary color. The interior portion of the polygon displayed on the color chart represents the range of colors that can be mixed by the LEDs in the unit. The range of colors that can be mixed when using a given set of primary LEDs is called the color gamut for those LEDs. Once the primary LED colors are determined, as they are in the evaluation unit, the color gamut is defined by those choices. Thus, the polygon displayed by the application defines the color gamut for the unit. Colors outside the color gamut cannot be represented by the given LEDs and thus cannot be selected by the user.

The CIE Color Mix Mode displays the 1931 CIE Color chart. This chart represents the range of colors visible to the human eye. Clicking anywhere within the color gamut polygon places a dot at the selected point. The corresponding CIE coordinates for that color coordinate are transmitted to the CY3267 Main Board, where the selected color is displayed by adjusting the four LEDs to brightness levels that create the specified mixed color. The resulting coordinates are displayed in the CIE Coordinates panel on the upper right portion of the display. The CIE 1931 x, y coordinates are displayed in the upper two coordinate fields and the u', v' coordinates are displayed in the lower two fields. An alternative to selecting a color by clicking in the color chart is to enter coordinates into these fields. The user can enter a color point in x, y coordinates, u', v' coordinates, or any combination of the two coordinate systems.

Figure 3-2. CIE Coordinates

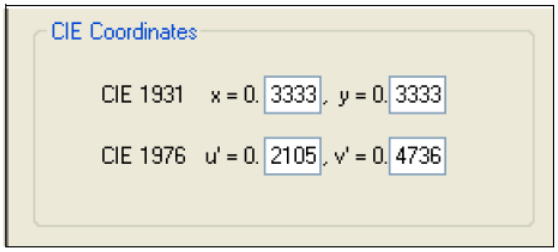

The Direct LED Control Mode is an alternative to specifying colors using CIE coordinates. This mode displays four slider controls, one for each LED on the LED daughter card. Moving a slider from bottom to top causes the corresponding LED to light from zero to one-hundred percent of its maximum rated flux. When the direct LED control mode is enabled, all controls that relate to mixing colors are disabled, including the Requested Luminous Flux slider that sets the total flux of a given mixed color: these controls have no meaning when setting the individual LED flux levels manually.

Figure 3-3. Intelligent Lighting Control - Direct LED Control

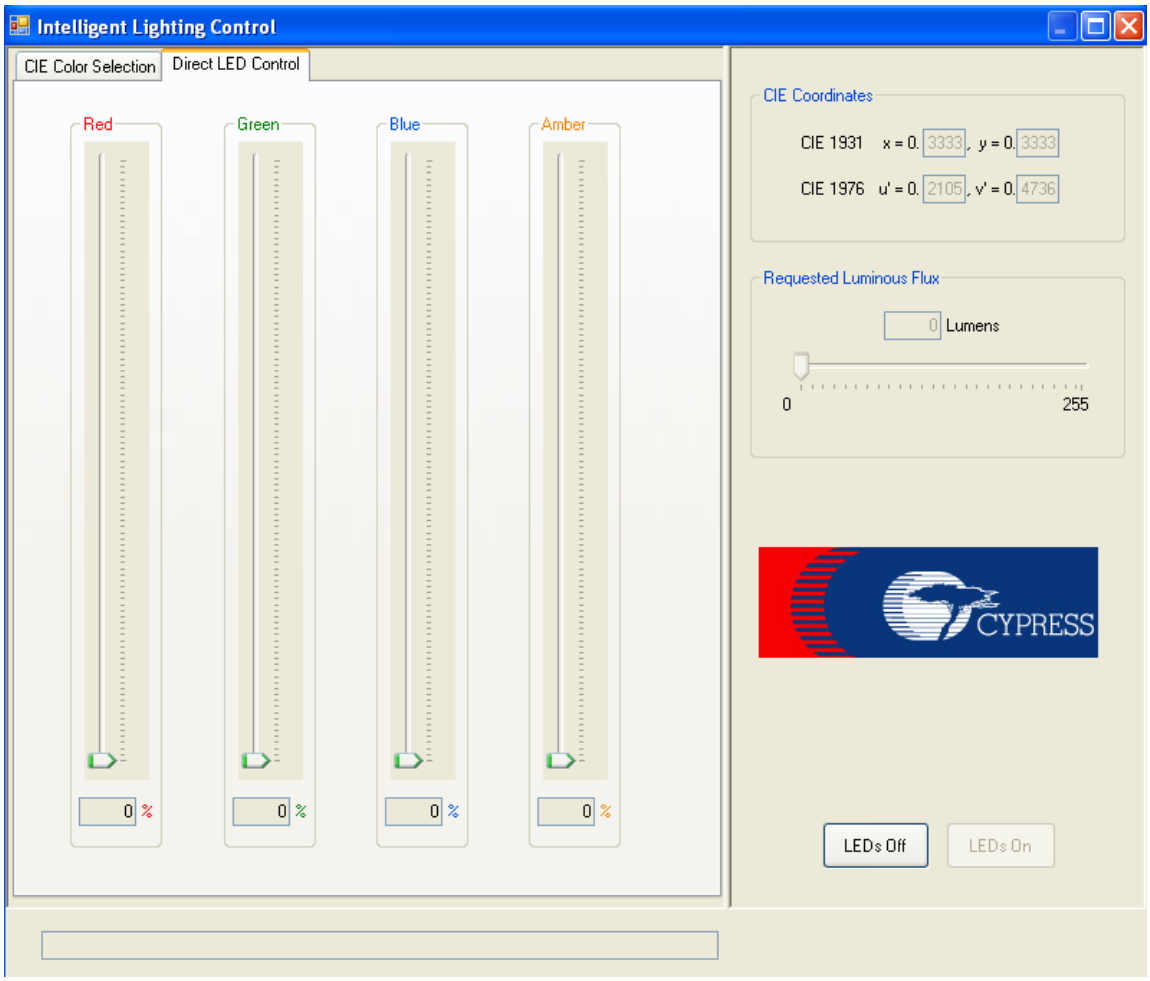

The application can also limit color choices to those that are produced by a black body radiator. A black body radiator is a theoretical, color-neutral object defined by Planck's Law. A black body radiator glows (radiates energy) at different colors as it is heated. When enabled, the black body curve is

displayed on the CIE color chart. This curve marks the colors that correspond to the color of a black body radiator over a range of temperatures in Kelvin. The user selects the color temperature value by sliding the color temperature slider.

Color temperature (more generally, correlated color temperature) is a common way that the color of light in the white region is specified. Disabling the color temperature control removes the black body curve from the color chart, disables the color temperature slider, and enables the controls used to specify mixed colors using the CIE color chart.

Figure 3-4. CIE Color Selection Tab - Color Temperature Control

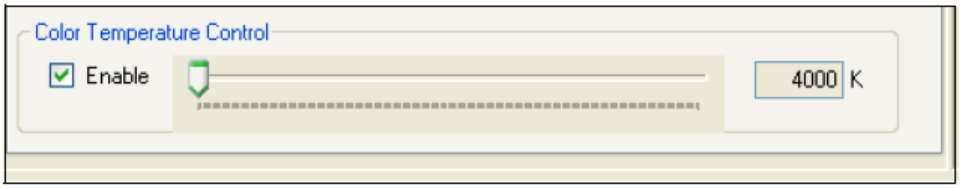

In addition to displaying colors, the application allows the user to turn the LEDs On or Off. The state of the LEDs (On or Off) is based on a closed loop between the application and the CY3267 Main Board that determines the actual on/off state of the LEDs. The On/Off buttons are displayed on the bottom right portion of the application's window. When the LEDs are off, the LEDs On button is enabled. Clicking on this button turns the LEDs on. If the LEDs are on, the Off button is enabled and clicking on this button turns the LEDs off. Regardless of the setting when the application is not connected to a board, the buttons change to show the actual state of the LEDs when the board is attached.

Figure 3-5. LEDs ON/OFF Control

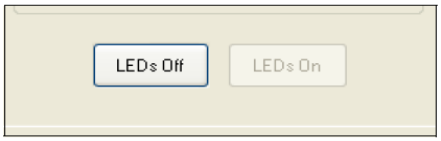

Below the tabbed window is a status window, which shows the current status of the connection between the application and the CY3267 Main Board, and any error messages. If an error or change of status occurs, a message appears describing the event. The message "I2C Bridge device found - Version 1.0" is displayed in the status window. The message appears for approximately five seconds and is then cleared from the status window.

3.3 LED Luminous Flux

The luminous flux of the mixed color output can be varied using the Requested Luminous Flux slider located on the right side of the application window. The maximum total flux produced by the LEDs varies, depending upon the chosen color. For example, a neutral white can be set to a higher total flux than any of the four primary colors alone, as the color white is represented by a sum of the light output of each of the LEDs. The saturation point (the point of maximum total flux) differs for different colors. Moving the slider to a requested flux higher than the saturation point for a given color has no effect upon the light output of the LEDs as they remain at that mixed color's saturation point. Note that this slider determines the requested luminous flux. This requested value is usually derated by the color mixing firmware on the CY3267 Main Board. This is required to perform temperature compensation, keeping the requested color as accurate as possible.

Figure 3-6. Luminous Flux

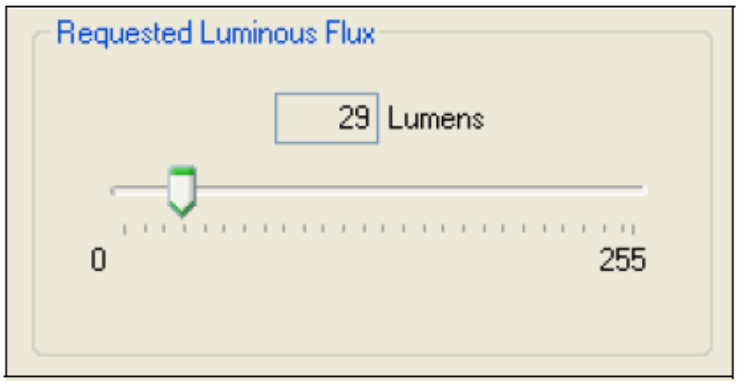

4. Hardware

WARNING: HIGH BRIGHTNESS LEDs CAN CAUSE PERMANENT EYE DAMAGE!

Do not look at the LEDs if they are not covered by the optical diffuser. The LEDs illuminate at a very high intensity and can cause permanent eye damage if they are viewed without the optical diffuser.

WARNING: Generally all lab work in power electronics must be done with extreme care. Caution must be exercised when using power supplies and/or power related equipment.

4.1 Board Specification

4.1.1 Main Board

Feature	Description
Main Board Power Source (Wall-wart)	12V DC, 2A
Main Board Power Source (External power supply through screw terminals J2)	32V DC, 4A
Maximum Power Consumption	128 W (32V*4A)
Board Size	4.75 x 5 x 0.063 inches (121 x 127 x 1.62 mm)
Layer Count	4 layers (TOP, GND, HV_VCC, BOTTOM)

Figure 4-1 on page 18 shows a labeled diagram of the CY3267 Main Board with all the key components marked. The board provides options for interfacing the Artaflex™ WirelessUSB Radio module, FirstTouch RF Interface, 5V and a Thermistor interface for the LED daughter card. However, the kit's default firmware does not provide support for these interfaces.

Figure 4-1. CY3267 PowerPSoC Lighting Evaluation Kit Main Board

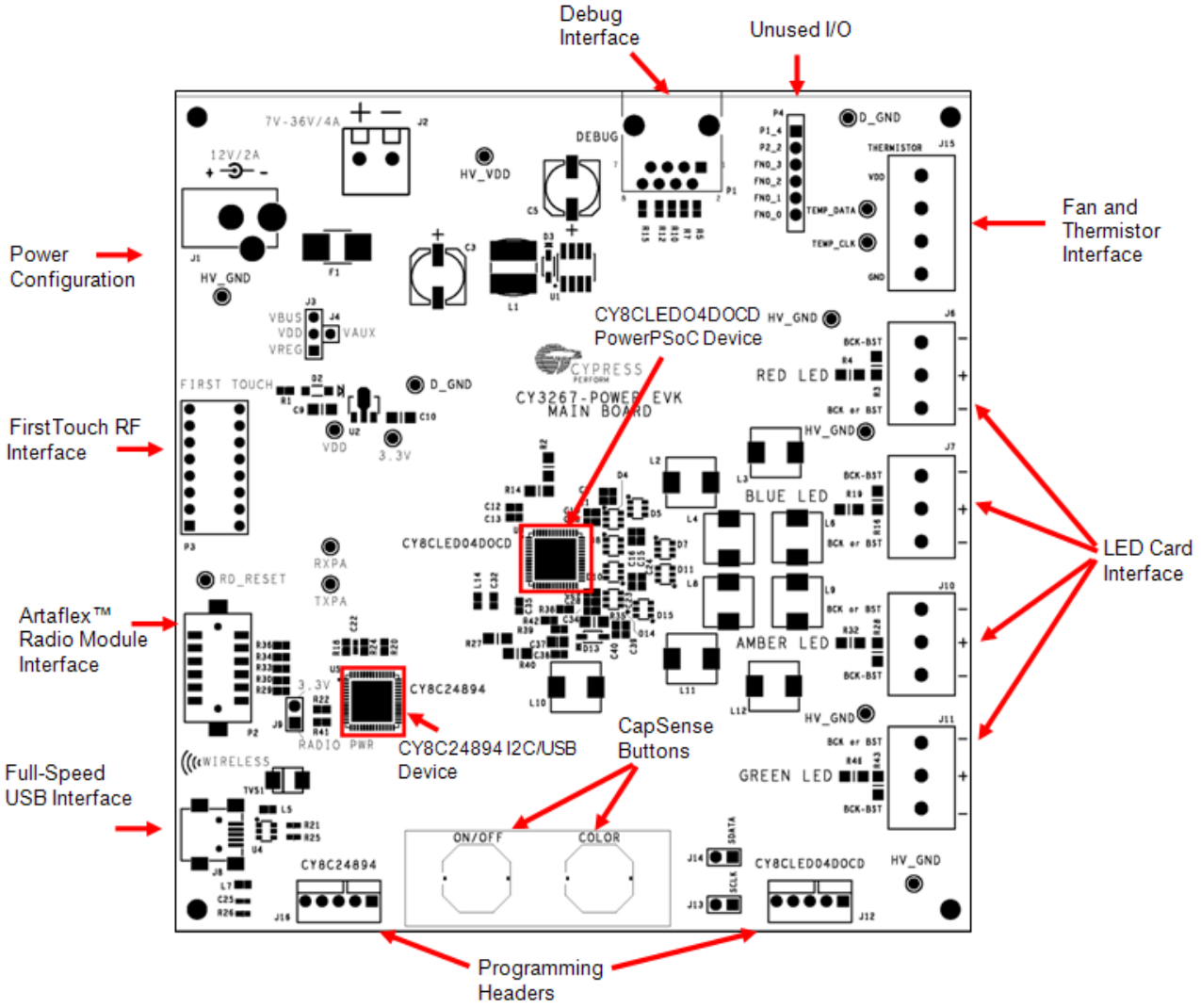

4.1.2 LED Daughter Board

Feature	Description
Power Source	5V (via J15)
Maximum Power Consumption	5V, 1mA (5mW)
Board Size	3.15 x 3.15 x 0.063 inches (80 x 80 x 1.62 mm)
Layer Count	2 layers (TOP, BOTTOM)

Figure 4-2. CY3267 LED Daughter Board

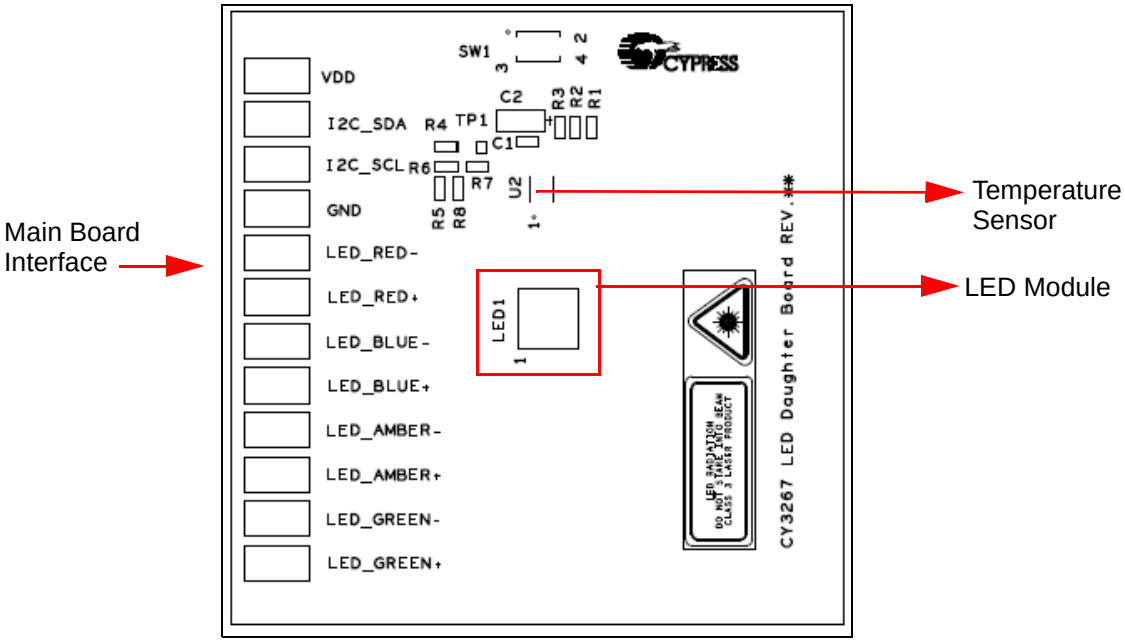

4.2 Jumper Settings and Connector Descriptions

Power Nets

The board has several power nets. The definitions of the different power nets follows.

- **HV_VDD (7V-32V)** - This is the input power before it is fed to any of the regulators.
- **VDD (5V)** - Power provided to the PSoC devices.
- **VREG (5V)** - This is fed by HV_VDD and is the output of the onboard 5V regulator.
- **VAUX (5V)** - This is fed by HV_VDD and is the output of the PSoC auxiliary 5V regulator.
- **VBUS (5V)** - Power derived from the USB interface via a USB host.
- **3.3V** - This is fed by the onboard 5V regulator (VREG).
- **HV_GND** - Ground reference for high voltage HV_VDD net.
- **D_GND** - Ground reference for digital 5V net.

J1 - DC Power Jack

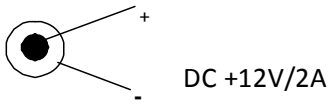

Use a 12V/2A wall wart power supply when powering from the barrel power jack. This input power is HV_VDD. The barrel power jack is equipped with an internal switch which, when a wall wart power supply is plugged in, disengages the J2 ground terminal, preventing the board from being overpowered by more than one power supply.

J2 - Screw Terminal Power Block

This terminal block provides the user with ability to power the main board with a bench power supply. The terminal block supports 7V-32V at up to 4A. A wall wart power supply should not be used if power is being supplied to the board through the J2 terminal block.

J3 - PSoC Power

This header allows the user to select the 5V source from either the onboard regulator (VREG), the PSoC auxiliary regulator (VAUX), or from the USB 5V rail (VBUS).

J9 - Artaflex Wireless Radio Module Power

Header J9 must be jumpered in order to use the Artaflex wireless radio module. Placing a jumper on J9 provides 3.3V power to the radio module.

J13, J14 - I2C Clock and Data Pull Ups

Headers J13 and J14 are provided for expandability of the system to support external daughter cards with I2C capable interfaces. DALI and DMX512 daughter cards are examples of expandable cards which could be used with this board. Programming header J12 doubles as both a programming header for the CY8CLED04DOCD device and an I2C interface to the CY8CLED04DOCD device. Placing shunts on J13 and J14 to pull up the I2C clock and data lines would be necessary if these types of daughter cards are used. Otherwise, these two headers should remain un-shunted.

J6, J7, J10, J11 - LED Daughter Card Connectors

These 4 terminal blocks provide the LED power interface between the main board and the LED daughter card. The terminal blocks are labeled as "BCK or BST" and "BCK-BST". If the board is configured for buck or boost operation, the LED daughter card should be wired with the "+" wire (LED cathode) connected to the center terminal and the "-" wire (LED anode) connected to the terminal labeled "BCK or BST". If the board is configured for buck-boost operation, the LED daughter card should be wired with the "+" wire connected to the center terminal and the "-" wire connected to the terminal labeled "BCK-BST".

J15 - LED Daughter Card Thermistor

This terminal block provides an interface for I2C communication between the main board and the LED daughter card. Terminals are clearly labeled and can be wired one-to-one with the LED board using the VCC, GND, DATA, and CLK wires.

P4 - Unused GPIO

Receptacle P4 provides access to the unused GPIO of the PowerPSoC device.

P1 - RJ45 ICE Cube Emulation Connector

This RJ45 receptacle provides a debug interface between the CY8CLED04DOCD device and the ICE Cube emulation tool using the PSoC Designer software application.

P2 - Artaflex Radio Module Connector

This 12-pin connector provides an interface to the Artaflex radio module. The module is powered by a 3.3V source and communicates with the PSoC device via the I2C protocol.

P3 - FirstTouch RF Radio Module Connector

This 16-pin connector provides an interface to the CY3271 FirstTouch radio module. The module is powered by a 3.3V source and communicates with the CY8C24894 device via the I2C protocol.

J8 - Full Speed USB Port

The board has a mini-B full speed USB connector. There are also two test points for the differential pair signals D- and D+. The power net VBUS is brought into the board through this interface.

CapSense Elements

The main board has two capacitive sensing elements connected directly to the CY8C24894 PSoC device. If the default firmware provided is used, the button on the left switches the LEDs on and off while the button on the right cycles through various color combinations displayed on the LED daughter card.

4.3 Floating Load Buck Topology

The CY3267 Main Board is populated with components for the floating-load buck topology. The floating load buck topology consists of two ceramic input bypass capacitors (0.1uF and 1.0uF) each rated for 50V in 0603 package size. These are low ESR type capacitors. Current flow through the LED is sensed by the PowerPSoC device using a 0.1 ohm sense resistor (R2 below). Not pictured is the LED itself, but is attached to the terminal block (J6 below) with the anode side connected to the center pin 2 labeled with a "+" sign. The cathode side of the LED is connected to pin 3 of the terminal block labeled "-" or "BCK or BST". The inductor is rated for 1.41A so as to handle high peak currents. Diode selection also takes into account the peak current that the diode could see, given the size of the inductor and the ripple current. The diode is a 40V, 2.2A rated Schottky type diode. Also included in the circuit is a v zener diode connected to the PSoC FET drain so as to protect the drain voltage from climbing above 36V.

Note: The terminal block pins 1 and 3 for J10 and J11 are swapped from that of J6 and J7. Ensure that the cathode side (negative terminal of LED) is connected to the pin labeled "BCK or BST" on the CY3267 Main Board.

Figure 4-3. Floating Load Buck Topology, Single Channel

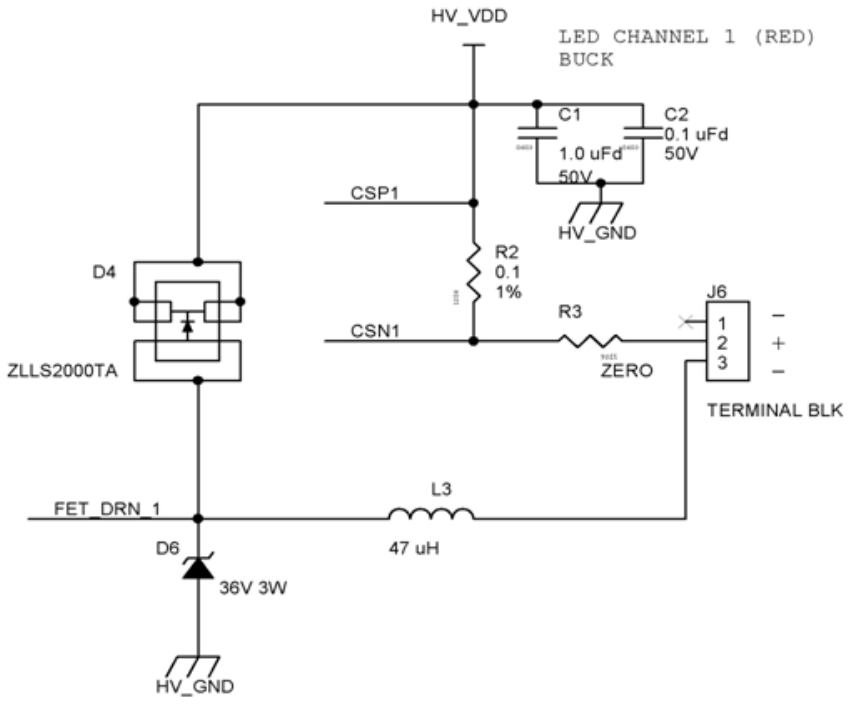

4.3.1 Board Wiring Instructions

The main board is equipped with five screw-terminal blocks used to connect the LED and main board together. The 4-post terminal block (J15) is used as the I2C interface between the PowerP-SoC device and the thermistor on the LED board. This terminal block contains the following signals:

Table 4-1. Signals

Signal	Wire Color
VDD (5V)	RED
TEMP_DATA	TAN
TEMP_CLK	GREEN
GND (GROUND)	BLACK

The other four terminal blocks are used to connect the multi-color LED module to the main board. These are J6 (RED channel), J7 (BLUE channel), J10 (AMBER channel) and J11 (GREEN channel). The LED daughter card has two wires connected to each color of the module. One wire is connected to the anode side of the LED while the other wire is connected to the cathode side of the LED. Each of these terminal blocks has two possible wiring schemes associated with them. The default scheme is the Buck or Boost scheme. The other scheme is the Buck-Boost scheme. The following matrix shows these schemes with wire colors and the posts they connect to.

Note: To prevent damage to the LED and PowerPSoC, ensure that the boards are wired according to Figure 4-4.
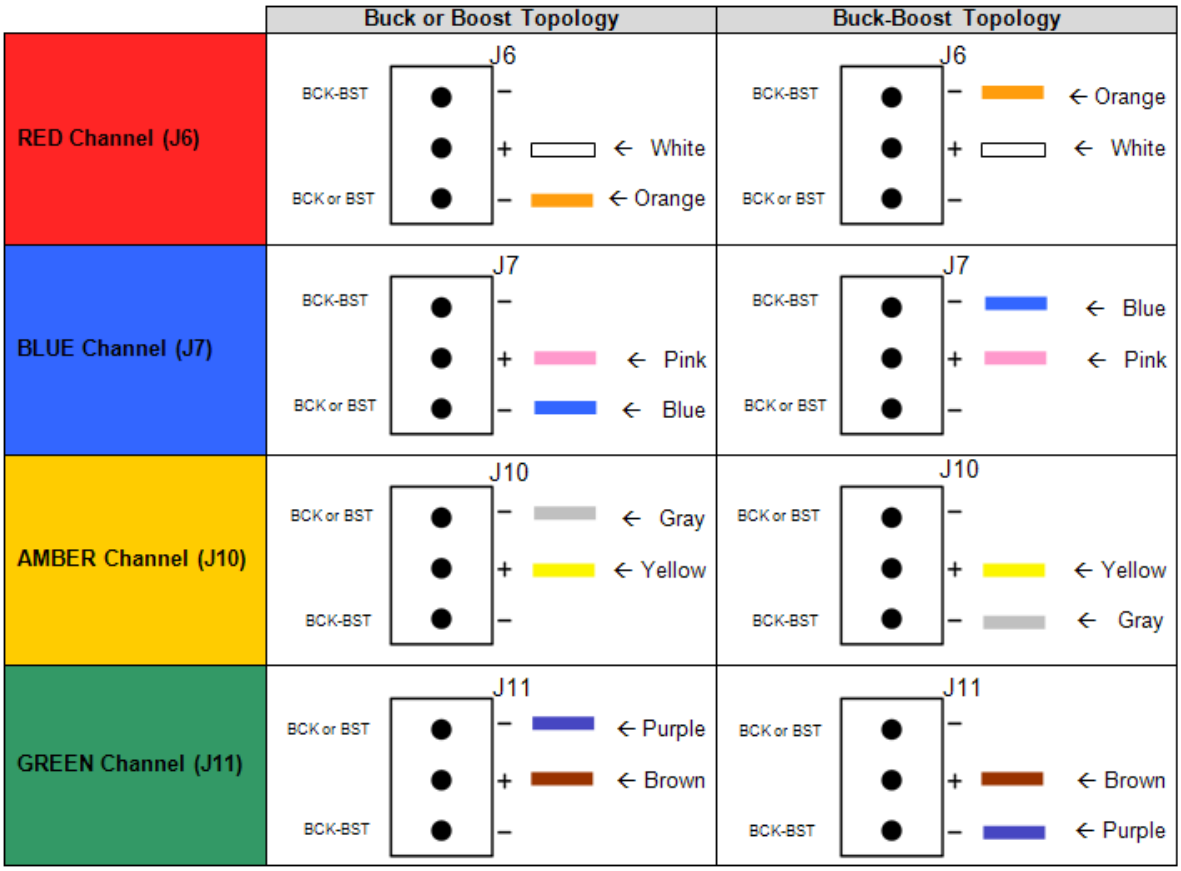
Figure 4-4. Main Board Wiring Scheme