MALE END VIEW

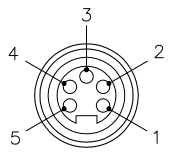

1 = BLACK
2 = BLUE
3 = GREEN/YELLOW
4 = BROWN
5 = WHITE

SPECIFICATIONS

CONTACT CARRIER MATERIAL/COLOR	POLYURETHANE/BLACK
CONTACT MATERIAL/PLATING	BRASS/GOLD
HOUSING MATERIAL/FINISH	316 STAINLESS STEEL/PASSIVATED
RATED CURRENT [A]	9.0 A
RATED VOLTAGE [V]	600 V
CONDUCTOR INSULATION MATERIAL	PVC
NUMBERS OF CONDUCTORS [AWG]	5x18 AWG
TEMPERATURE RATING	−55°C to +105°C (−67°F to +221°F)
PROTECTION CLASS	MEETS NEMA 1,3,4,6P AND IEC IP67

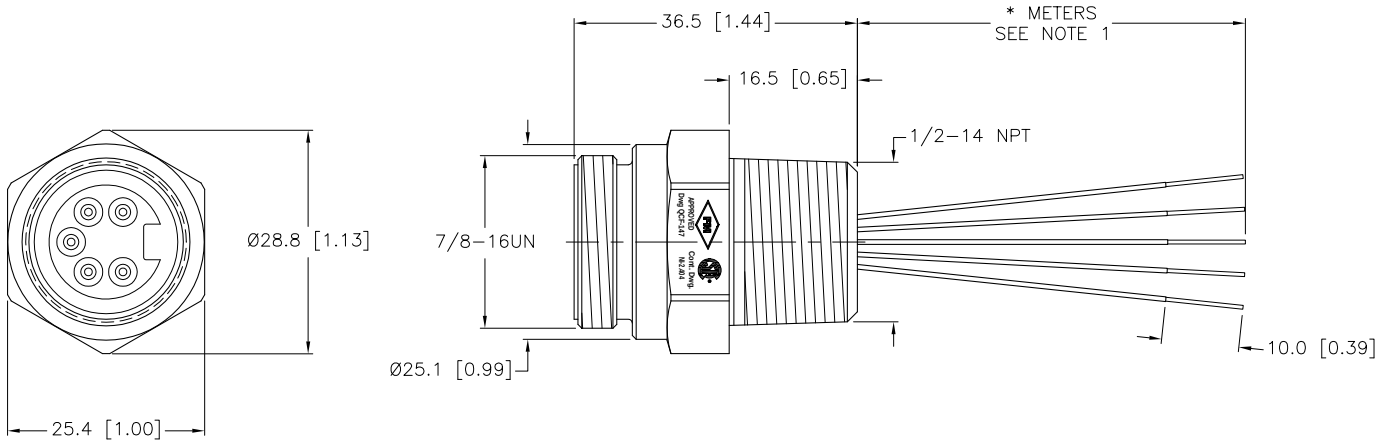

CABLE LENGTH	TOLERANCE
ALL LENGTHS	+ 4% (OR 50mm) OF LENGTH − 0% (OR 0mm) OF LENGTH WHICHEVER IS GREATER
STRIP LENGTH	**TOLERANCE**
0−7mm	±0.5mm
8−29mm	±1.0mm
30−49mm	±2.0mm
50−69mm	±3.0mm
70−100mm	±4.0mm
OVER 100mm	±5.0mm

SOURCE DRAWING - FOR REFERENCE ONLY

NOTES:

1. "*" INDICATES LEAD LENGTH IN METERS. CONTACT TURCK TO ORDER SPECIFIC LENGTHS.

REV	DESCRIPTION	BY	DATE	ECO NO.
B	UPDATE LOGO	RDS	03/11/09	25422

RELATED DOCUMENTS
1.
2.
3.
4.

3RD ANGLE PROJECTION

THIS DRAWING IS PROPERTY OF TURCK INC. USE OF THIS DOCUMENT WITHOUT WRITTEN PERMISSION IS PROHIBITED.

TURCK INC
High Technology Sensors and Automation Controls

3000 CAMPUS DRIVE
MINNEAPOLIS, MN 55441
1−800−544−7769
(763) 553−7300
(763) 553−0708 fax
turck.com

MATERIAL: SEE SPECIFICATIONS

FINISH: SEE SPECIFICATIONS

ALL DIMENSIONS DISPLAYED ON THIS DRAWING ARE FOR REFERENCE ONLY

CONTACT TURCK FOR MORE INFORMATION

DRFT: RDS | DATE: 07/25/07
DSGN: | SCALE: 1=1.0

UNIT OF MEASUREMENT
MILLIMETER [INCH]
DO NOT SCALE THIS DRAWING

DESCRIPTION: P−RSFV 56 EX−*/14.5/NPT

IDENTIFICATION NO.:

REV: B

FILE: 777012369

SHEET 1 OF 1