THIS DRAWING IS UNPUBLISHED. RELEASED FOR PUBLICATION ,19 .
© COPYRIGHT 19 BY AMP INCORPORATED. ALL RIGHTS RESERVED.

LOC	DIST
GP	00

REVISIONS

P	LTR	DESCRIPTION	DATE	DWN	APVD
	0	RELEASED PER EC 0513-0196-03	31JUL03	JR	JG

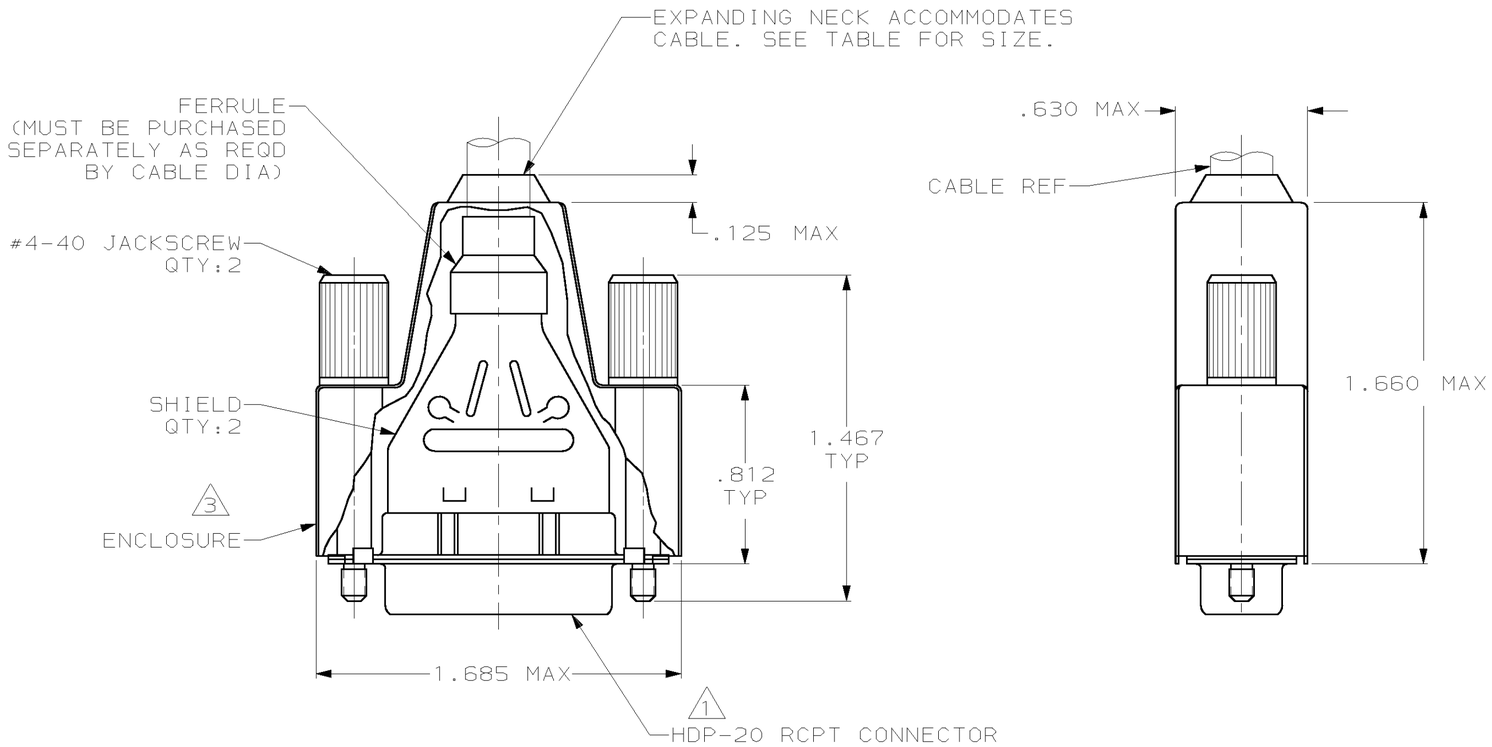

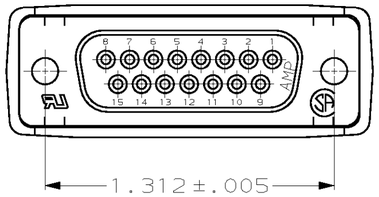

1. RCPT ACCEPTS SIZE 20 DF SOCKET CONTACTS. CONTACTS MUST BE PURCHASED SEPARATELY.
2. ALL PARTS SHIPPED UNASSEMBLED.
3. FLAME RETARDANT 94V-0 RATED, STYRENE POLYOLEFIN OR PVC, BLACK.
4. FLAME RETARDANT 94V-0 RATED GLASS FILLED, NYLON OR POLYESTER, BLACK.
5. STEEL PER ASTM A109.
6. .000200 MIN TIN PLATE OVER .000100 MIN COPPER UNDERPLATE.
7. COMPONENTS INDIVIDUALLY BULK PACKED.
8. ZINC ALLOY.
9. ZINC PHOSPHATE COATING, BLACK.

CABLE SIZE	PACKAGING	JACKSCREWS FINISH	JACKSCREWS MATERIAL	WITH LOGO	PART NO
.190-.375 DIA	7	9	8	YES	1658656-1

THIS DRAWING IS A CONTROLLED DOCUMENT.

DIMENSIONS: INCH

TOLERANCES UNLESS OTHERWISE SPECIFIED:
0 PLC ±-
1 PLC ±-
2 PLC ±-
3 PLC ±.020
4 PLC ±-
ANGLES ±-

MATERIAL INSERT: 4
SHELLS & SHIELDS: 5
JACKSCREWS: SEE TABLE

FINISH
SHELLS & SHIELDS: 6
JACKSCREWS: SEE TABLE

DWN J.REITZEL 31JUL03
CHK S.BOLASH 31JUL03
APVD M.WALMSLEY 31JUL03
PRODUCT SPEC 108-40030
APPLICATION SPEC 114-40030
WEIGHT –

AMP Incorporated
Harrisburg, PA 17105-3608

NAME
BULK KIT, RECEPTACLE, SHIELDING ENCLOSURE, 15 POSN, SIZE 2, AMPLIMITE™ HDP-20

SIZE	CAGE CODE	DRAWING NO	RESTRICTED TO
A2	00779	C- 1658656	–

CUSTOMER DRAWING | SCALE 2:1 | SHEET 1 OF 1 | REV 0

1658656

AMP 1471-9 REV 11JUN97

31-JUL-03 11:15:27 us019907 /ws/escdesig/ecns/EC-0513-0196-03