EN

Professionally approved products.

Datasheet

IEC mains lead locking clamp

RS Stock number 317-478

Drawing (mm):

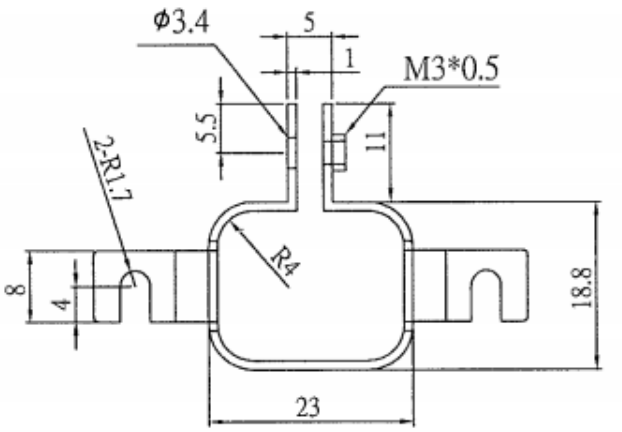

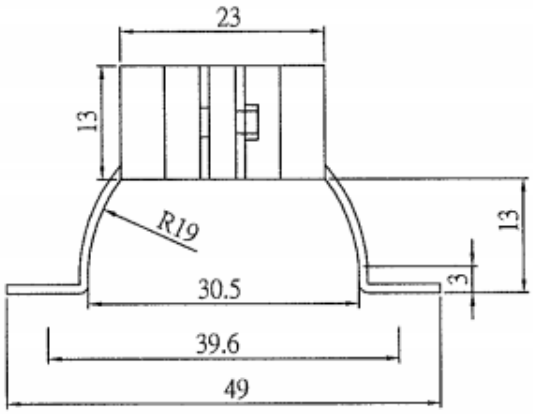

未註明公差(單位:mm)	
0~5	±0.2
5~15	±0.3
15~30	±0.5
30~100	±0.8
100~300	±1.0
300~1000	±1.2

RS, Professionally Approved Products, gives you professional quality parts across all products categories. Our range has been testified by engineers as giving comparable quality to that of the leading brands without paying a premium price.