ENGLISH

Datasheet

Natural 4 Way Male Straight Panel Mount XLR Connector, Silver Plate

RS Stock 548-9155

Dimensions: (mm)

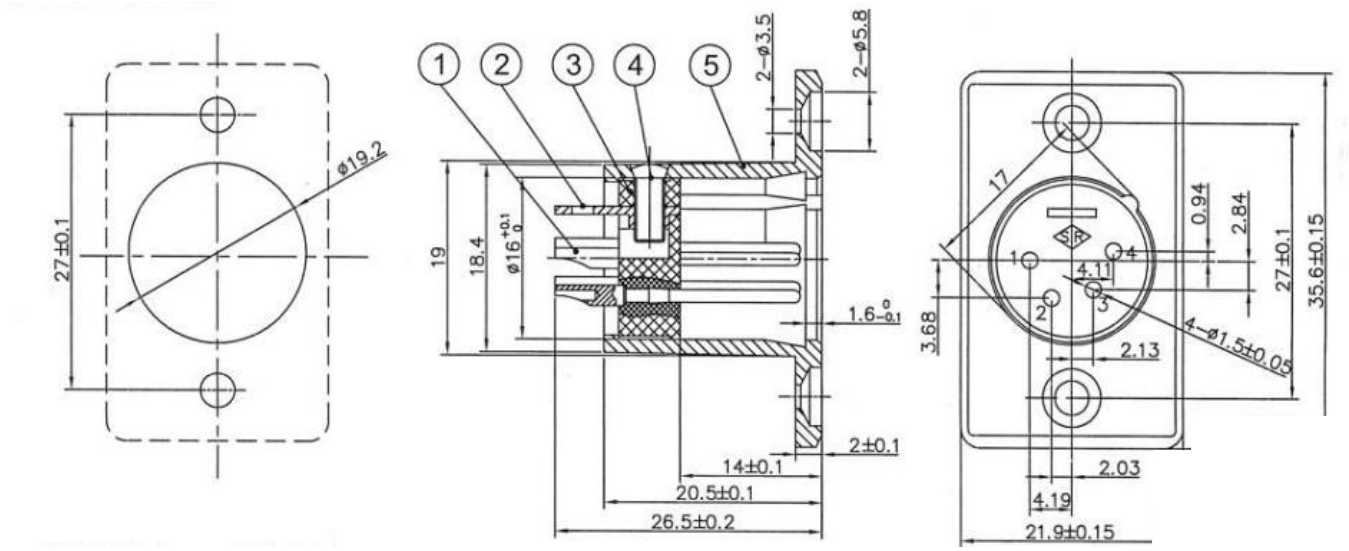

RS, Professionally Approved Products, gives you professional quality parts across all products categories. Our range has been testified by engineers as giving comparable quality to that of the leading brands without paying a premium price.