SIEMENS

NPN Silicon Darlington Transistors

BSP 50
… BSP 52

- High collector current
- Low collector-emitter saturation voltage
- Complementary types: BSP 60 … BSP 62 (PNP)

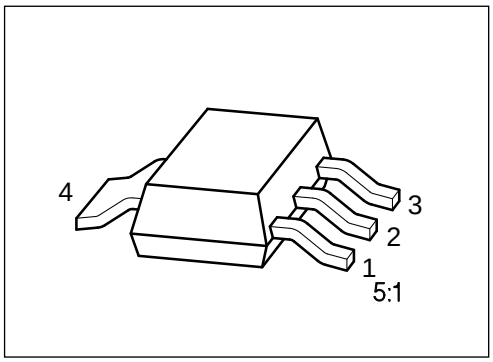

Type	Marking	Ordering Code (tape and reel)	Pin Configuration 1	2	3	4	Package[1)]
BSP 50 BSP 51 BSP 52	BSP 50 BSP 51 BSP 52	Q62702-P1163 Q62702-P1164 Q62702-P1165	B	C	E	C	SOT-223

Maximum Ratings

Parameter	Symbol	Values BSP 50	BSP 51	BSP 52	Unit
Collector-emitter voltage	V_{CER}	45	60	80	V
Collector-base voltage	V_{CB0}	60	80	100	
Emitter-base voltage	V_{EB0}	5			
Collector current	I_C	1			A
Peak collector current	I_{CM}	2			
Base current	I_B	0.1			
Total power dissipation, T_S = 124 °C	P_{tot}	1.5			W
Junction temperature	T_j	150			°C
Storage temperature range	T_{stg}	– 65 … + 150			

Thermal Resistance

Junction - ambient[2)]	$R_{th\ JA}$	≤ 72	K/W
Junction - soldering point	$R_{th\ JS}$	≤ 17	

1) For detailed information see chapter Package Outlines.
2) Package mounted on epoxy pcb 40 mm × 40 mm × 1.5 mm/6 cm² Cu.

Electrical Characteristics
at T_A = 25 °C, unless otherwise specified.

Parameter	Symbol	Values			Unit
		min.	typ.	max.	
DC characteristics					
Collector-emitter breakdown voltage[1)] I_C = 10 mA BSP 50 BSP 51 BSP 52	$V_{(BR)CER}$	 45 60 80	 – – –	 – – –	V
Collector-base breakdown voltage I_C = 100 µA, I_B = 0 BSP 50 BSP 51 BSP 52	$V_{(BR)CB0}$	 60 80 100	 – – –	 – – –	
Emitter-base breakdown voltage I_E = 100 µA, I_B = 0	$V_{(BR)EB0}$	5	–	–	
Collector-emitter cutoff current V_{CE} = V_{CERmax}, V_{BE} = 0	I_{CES}	–	–	10	µA
Emitter-base cutoff current V_{EB} = 4 V, I_C = 0	I_{EB0}	–	–	10	
DC current gain[1)] I_C = 150 mA, V_{CE} = 10 V I_C = 500 mA, V_{CE} = 10 V	h_{FE}	 1000 2000	 – –	 – –	–
Collector-emitter saturation voltage[2)] I_C = 500 mA, I_B = 0.5 mA I_C = 1 A, I_B = 1 mA	V_{CEsat}	 – –	 – –	 1.3 1.8	V
Base-emitter saturation voltage[2)] I_C = 500 mA, I_B = 0.5 mA I_C = 1 A, I_B = 1 mA	V_{BEsat}	 – –	 – –	 1.9 2.2	
AC characteristics					
Transition frequency I_C = 100 mA, V_{CE} = 5 V, f = 100 MHz	f_T	–	200	–	MHz
Switching times I_C = 500 mA, I_{B1} = I_{B2} = 0.5 mA (see diagrams)	 t_{on} t_{off}	 – –	 400 1500	 – –	 ns ns

1) Compare R_{BE} for thermal stability.
2) Pulse test conditions: $t \leq 300$ µs, D = 2 %.

Switching time test circuit

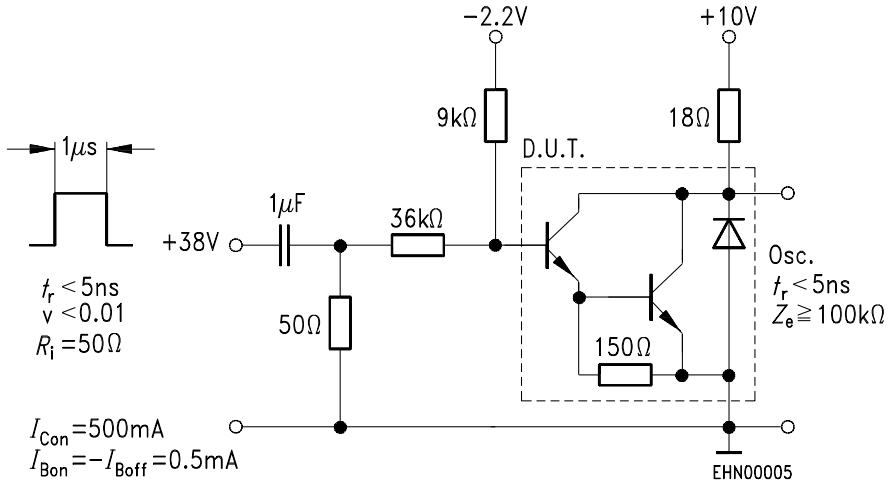

Switching time waveform

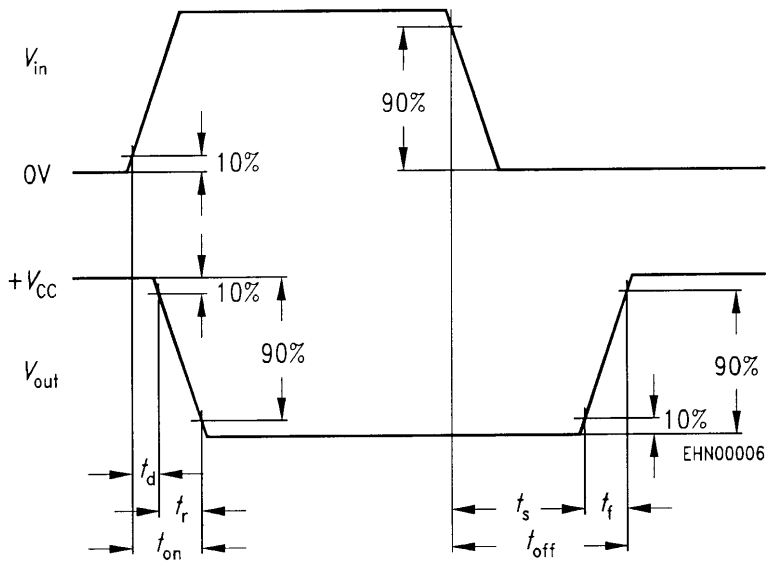

Total power dissipation $P_{tot} = f(T_A{}^*; T_S)$
* Package mounted on epoxy

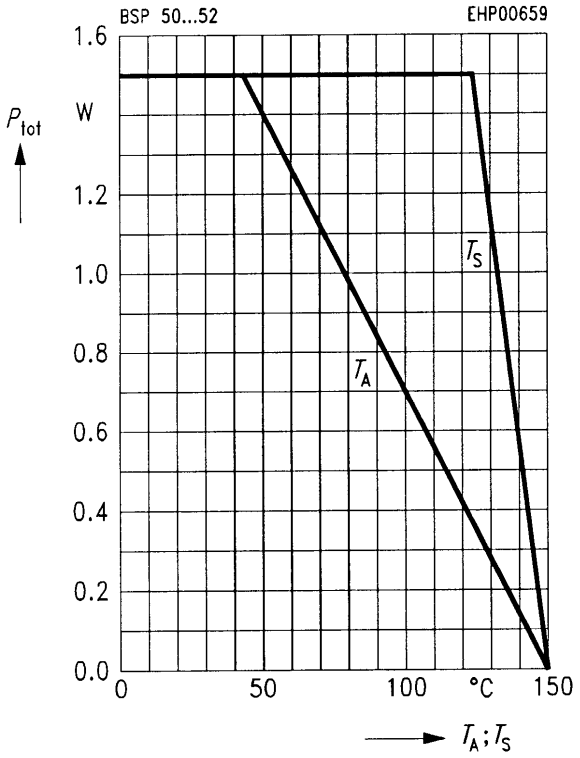

External resistance $R_{BE} = f(T_A)$**
$V_{CB} = V_{CE\,max}$
** $R_{BE\,max}$ for thermal stability

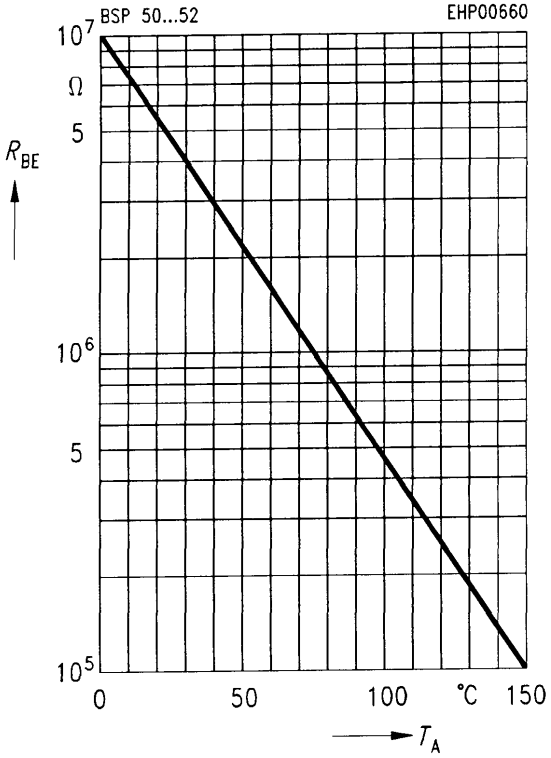

Permissible pulse load $P_{tot\,max} / P_{tot\,DC} = f(t_p)$

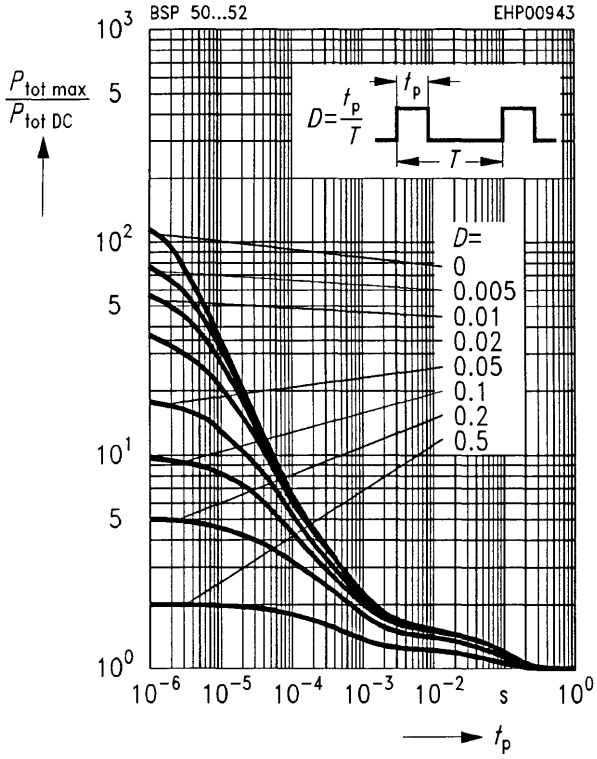

DC current gain $h_{FE} = f(I_C)$
$V_{CE} = 10$ V

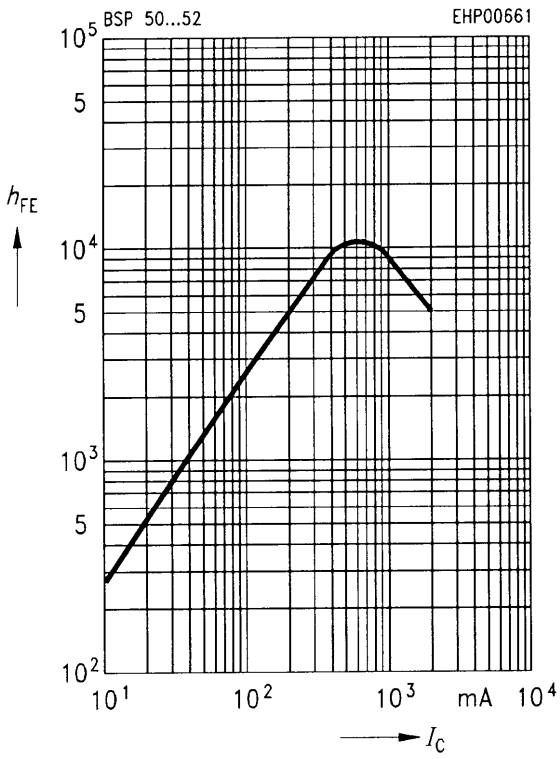

Collector-emitter saturation voltage
$I_C = f(V_{CE\,sat})$, I_B-parameter

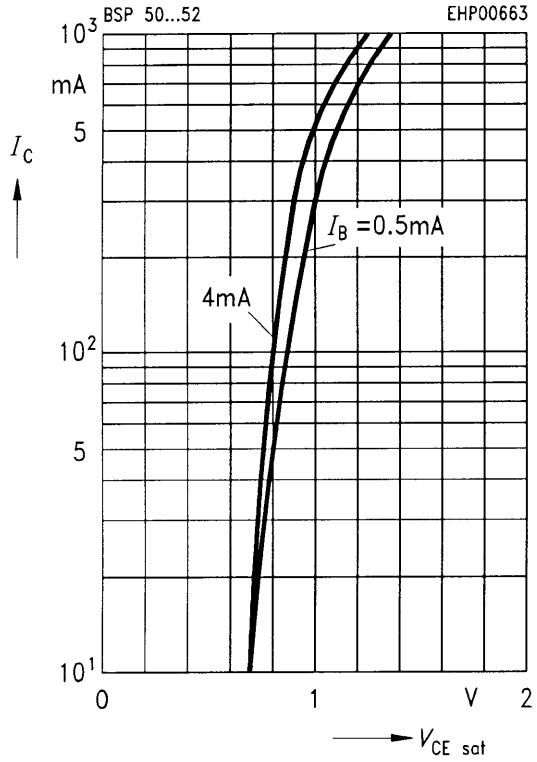

Base-emitter saturation voltage
$I_C = f(V_{BE\,sat})$, I_B-parameter

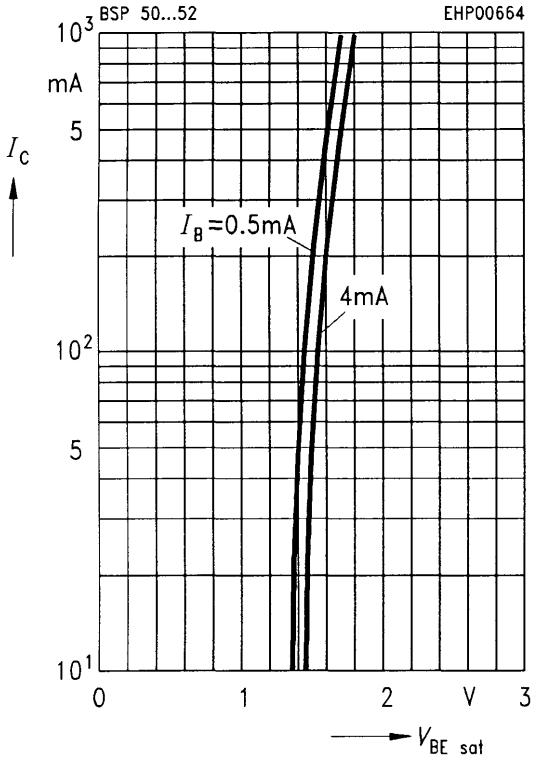
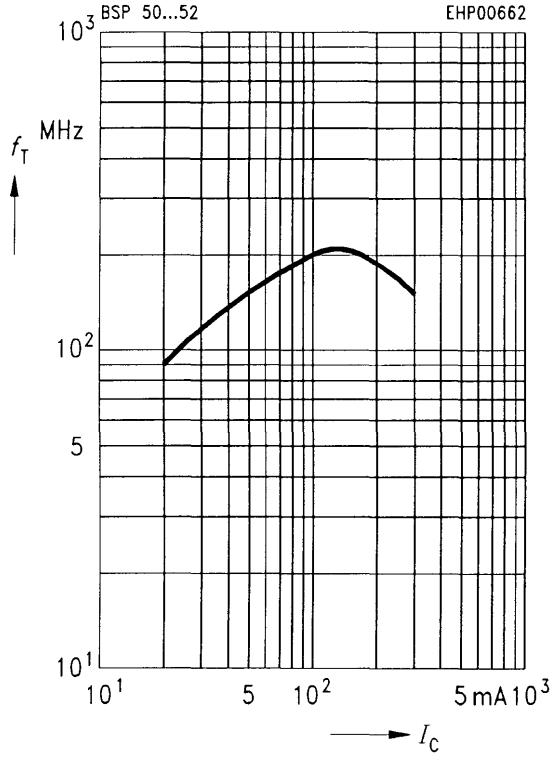
Transition frequency $f_T = f(I_C)$
V_{CE} = 5 V, f = 100 MHz