NO	DESCRIPTION	DATE
1	MODIFICATION PARTS ⑦⑧ NICKEL 100μ"MIN. ——→ NICKEL	07.16.11′
2	ADD 5.2; 4.0 MAX. PANEL	08.03.12′
3	DEL PROOF VOLTAGE WORKING VOLTAGE ——→ VOLTAGE RATING	01.02.13′
4	ADD VSWR	07.10.13′

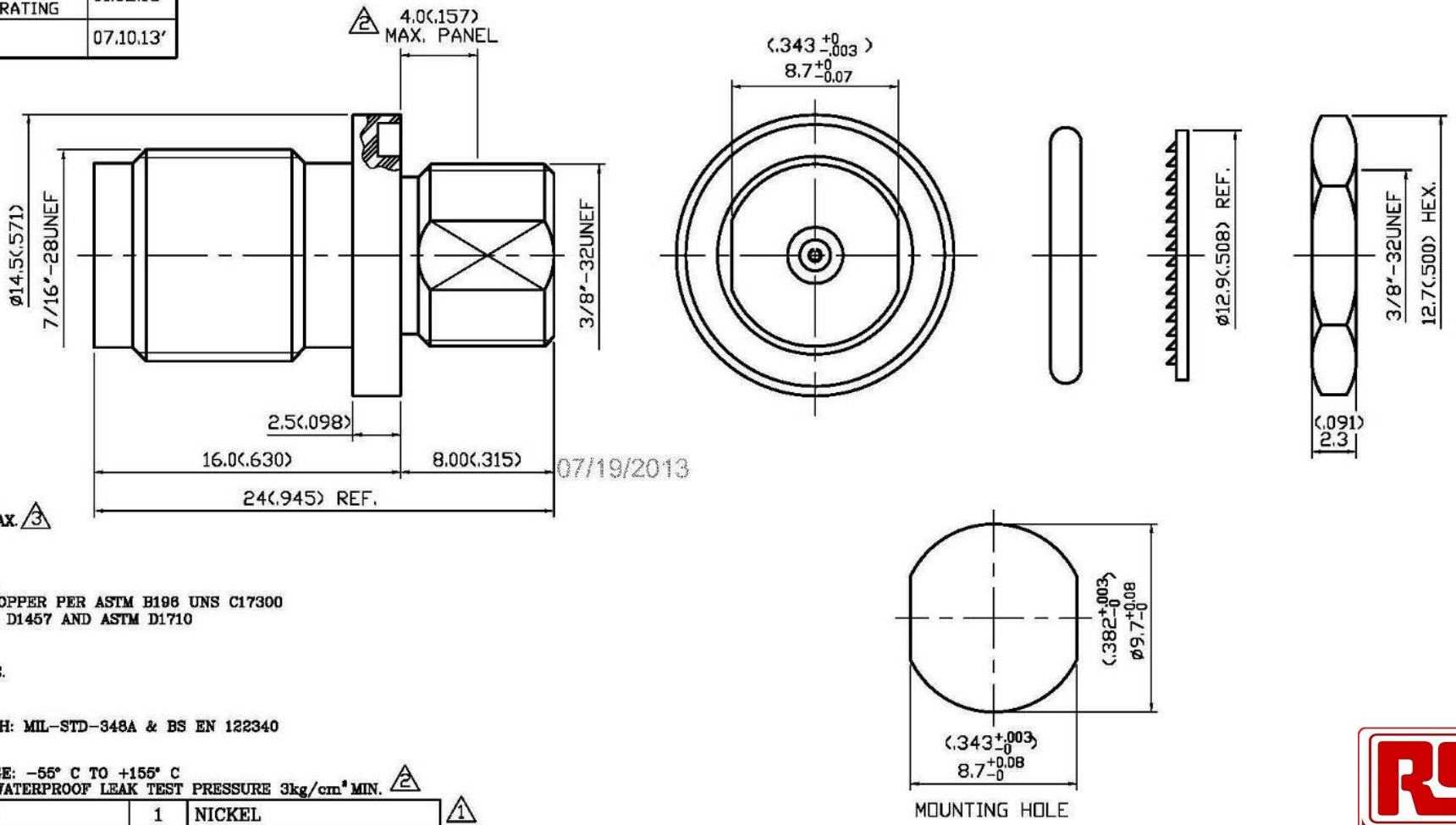

07/19/2013

1.0 ELECTRICAL

1.1 FREQUENCY RANGE: DC–6 GHz
1.2 NOMINAL IMPEDANCE: 50 OHMS
1.3 VOLTAGE RATING: 170 VOLTS MAX. 3
1.4 VSWR: 1.5 MAX. 4

2.0 MATERIALS

2.1 BODIES: BRASS PER JIS–C3604
2.2 CENTER CONTACT: BERYLLIUM COPPER PER ASTM B196 UNS C17300
2.3 INSULATION: TEFLON PER ASTM D1457 AND ASTM D1710

3.0 FINISHES AND OTHERS

3.1 SEE BELOW TABLE FOR DETAILS.

4.0 MECHANICAL

4.1 INTERFACE IN ACCORDANCE WITH: MIL–STD–348A & BS EN 122340

5.0 ENVIRONMENTAL

5.1 OPERATING TEMPERATURE RANGE: –55° C TO +155° C
5.2 CONNECTOR MUST WITHSTAND WATERPROOF LEAK TEST PRESSURE 3kg/cm² MIN. 2

NO	DESCRIPTION	MATERIAL	Q'TY	FINISH	
10	NUT	BRASS	1	NICKEL	1
9	WASHER	PHOSPHOR BRONZE	1	NICKEL	1
8	O–RING III	SILICONE	1	BLACK	
7	BODY	BRASS	1	WHITE BRONZE 80μ"MIN.	
6	CENTER CONTACT	BERYLLIUM COPPER	1	GOLD 30μ"MIN.	
5	O–RING II	SILICONE	1	BLACK	
4	INSULATION II	TEFLON	1	NONE	
3	O–RING I	SILICONE	1	BLACK	
2	WASHER	BRASS	1	WHITE BRONZE 80μ"MIN.	
1	INSULATION I	TEFLON	1	NONE	

APPROVED by _____ DATE: _____

DESCRIPTION	STRAIGHT TNC JACK – MMCX JACK BULKHEAD ADAPTER						
製圖 DRAWN: Kristina	TOLERANCE	品名 TITLE	37-17 T.G.WB/N \ROHS COMPLIANT (50Ω)	日期 DATE	05.18.06′	版次 REV.	A-4
檢圖 CHECK: Arc	.X ±0.2	單位 UNIT	mm(in)	DWG.NO.	37-0057		
	.XX ±0.1						
認定 APPROVAL: Angela	.XXX ±0.05	比例 SCALE	4:1				
	ANGLE ±5°						