THIS DRAWING IS UNPUBLISHED. RELEASED FOR PUBLICATION -,- .
© COPYRIGHT - BY TYCO ELECTRONICS CORPORATION. ALL RIGHTS RESERVED.

LOC	DIST
G	86

REVISIONS

P	LTR	DESCRIPTION	DATE	DWN	APVD
	E2	REVISED PER ECR 07-022932	26SEP07	JR	TM

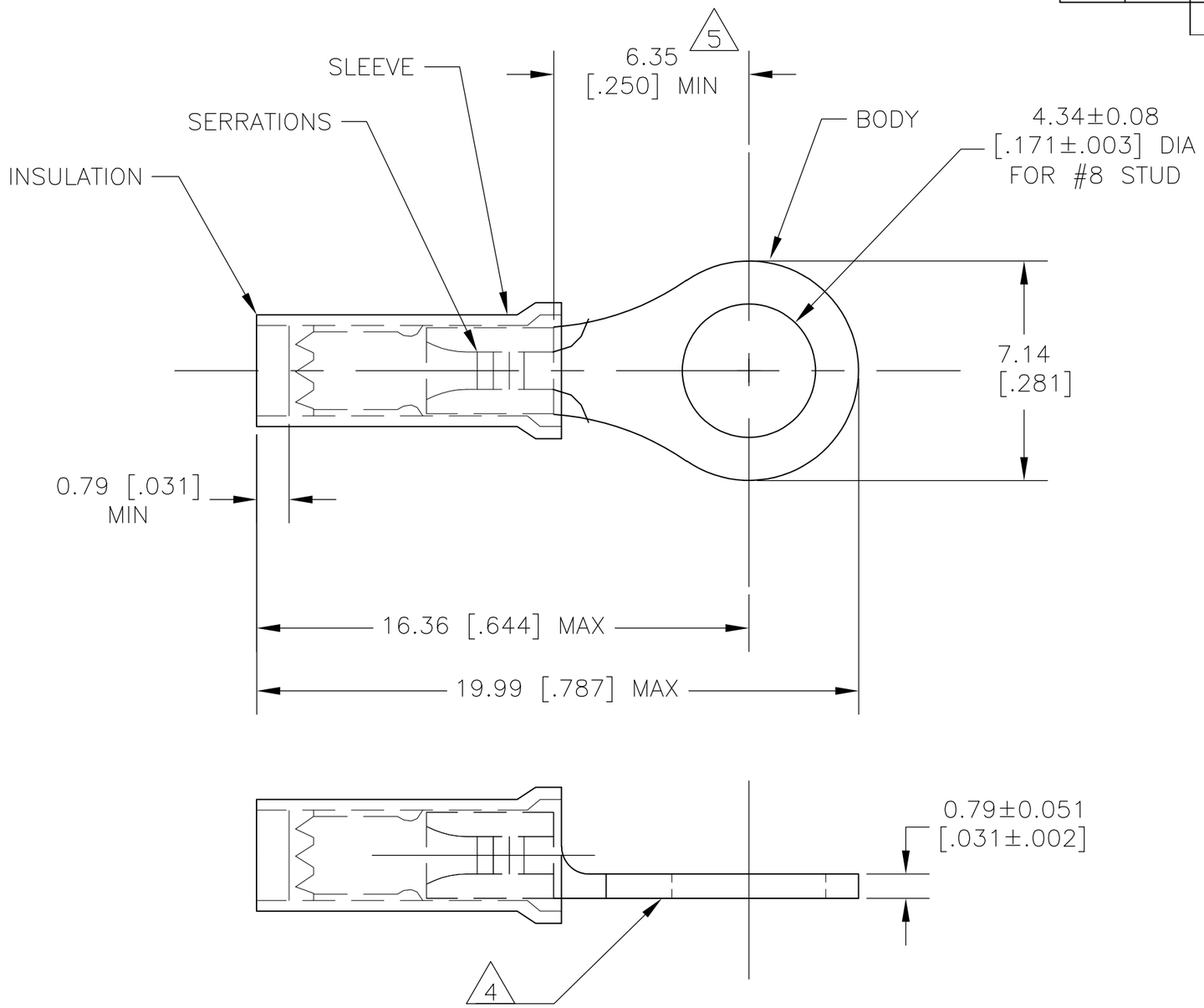

1. BODY - COPPER PER ASTM B152 ANNEALED
   SLEEVE - COPPER PER ASTM B152
   INSULATION - NYLON
2. BODY & SLEEVE - TIN PLATED
   INSULATION - COLOR - PURPLE
3. FOR 1.14-2.03 [.045-.080] DIA WIRE INSULATION
4. STAMP AMP 20, APPROX WHERE SHOWN.
5. APPLIES FROM EDGE OF METAL WIRE BARREL TO CENTERLINE OF STUD HOLE.
6. 0.41-0.65mm2 [810-1,290] CMA SOLID OR STRANDED

QTY	PACKAGING TYPE	PART NO.
1000	LOOSE PIECE	152894

THIS DRAWING IS A CONTROLLED DOCUMENT.

DIMENSIONS: MM [INCHES]

TOLERANCES UNLESS OTHERWISE SPECIFIED:

0 PLC	± -
1 PLC	± -
2 PLC	± -
3 PLC	± 0.38 [.015]
4 PLC	± -
ANGLES	± 5°

MATERIAL - 1

FINISH - 2

DWN	jr ruth	06AUG07
CHK	T MICHIELUTTI	30AUG07
APVD	T MICHIELUTTI	30AUG07
PRODUCT SPEC	—	
APPLICATION SPEC	—	
WEIGHT	—	

Tyco Electronics

Tyco Electronics Corporation
Harrisburg, PA 17105-3608

NAME: RING TONGUE, PIDG — —

SIZE	CAGE CODE	DRAWING NO	RESTRICTED TO
A3	00779	C-152894	—

CUSTOMER DRAWING

SCALE	SHEET	REV
6:1	1 OF 1	E2