## WIRING DIAGRAMS

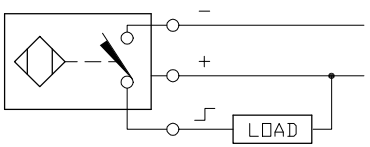


OUTPUT: AN6X2

SHORT-CIRCUIT AND OVERLOAD PROTECTED

## LOCKNUT LN-M12

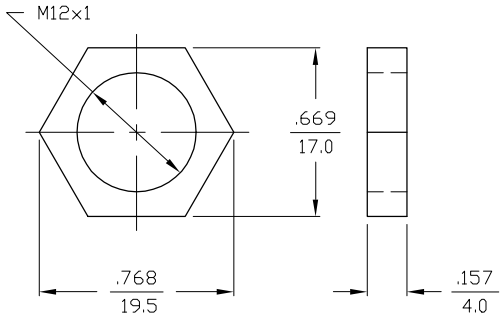


## SPECIFICATIONS

| | |
|---|---|
| OPERATING VOLTAGE | 10-30 VDC |
| RIPPLE | ≤10% |
| HYSTERESIS (DIFFERENTIAL TRAVEL) | 3-15% (5% TYPICAL) |
| VOLTAGE DROP ACROSS CONDUCTING SENSOR | ≤1.8 V at 200 mA |
| OUTPUT FUNCTION | NORMALLY OPEN<br>3-WIRE DC SELF-CONTAINED |
| TTL COMPATIBLE | NO |
| SHORT-CIRCUIT PROTECTED | YES |
| TRIGGER CURRENT FOR OVERLOAD PROTECTION | ≥220 mA |
| CONTINUOUS LOAD CURRENT | ≤200 mA |
| LEAKAGE (OFF-STATE) CURRENT | <10 μA |
| NO-LOAD CURRENT | 5.5-9.5 mA |
| TIME DELAY BEFORE AVAILABILITY | ≤8 ms |
| POWER-ON EFFECT PROTECTION | INCORPORATED |
| POLARITY INVERSION PROTECTION | INCORPORATED |
| WIRE-BREAK PROTECTION | INCORPORATED |
| PROTECTION AGAINST TRANSIENTS | 2 kV, 1 ms, 1 kΩ |
| OPERATING TEMPERATURE | -25°C to +70°C (-13°F to +158°F) |
| ENCLOSURE | MEETS NEMA 1, 3, 4, 6, 13 AND IEC IP67 |
| SHOCK | 30 g, 11 ms |
| VIBRATION | 55 Hz, 1 mm AMPLITUDE<br>(IN ALL 3 PLANES) |
| LED FUNCTION | GREEN: POWER ON<br>RED: OUTPUT ENERGIZED |
| SENSING RANGE | 2 mm = .079" (NOMINAL) |
| SWITCHING FREQUENCY | 2000 Hz |
| REPEATABILITY | ≤2% of NOMINAL SENSING RANGE |
| SHIELDED | YES |

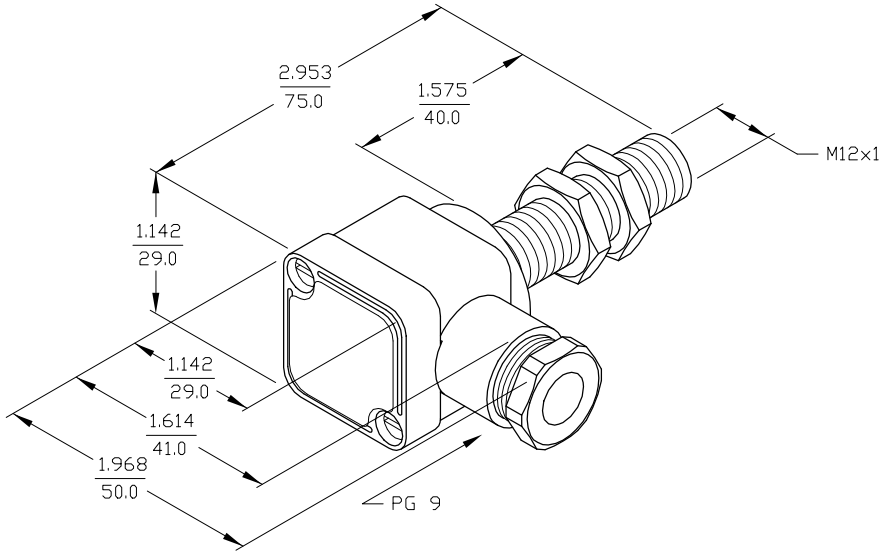


| REV | DESCRIPTION | DRFT | DATE | CHKD |
|---|---|---|---|---|
| A | SEE REVISION DOCUMENT G12SKAN6 | RJP | 5/5/93 | |

REVISIONS

MATERIAL: BRASS BARREL

FINISH:

3RD ANGLE PROJECTION

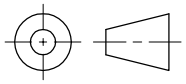

TURCK INC
3000 CAMPUS DRIVE
MINNEAPOLIS, MN 55441
PHONE: (612) 553-9224

DRWN GMB DATE 3/3/88

CHKD DATE

TMI

DIMENSIONS ARE IN INCHES / mm

PART NO. Bi2-G12SK-AN6X2

SIZE B | ID NO. 4636500 | REV A

SCALE NONE | BMTC-D\4636500 | SHEET ___ OF ___

This Document Was Officially Certified By TURCK Inc. On 1/28/2003 5:39:31 PM