THIS DRAWING IS UNPUBLISHED. RELEASED FOR PUBLICATION -.- .
© COPYRIGHT - BY TYCO ELECTRONICS CORPORATION. ALL RIGHTS RESERVED.

LOC	DIST
G	86

REVISIONS

P	LTR	DESCRIPTION	DATE	DWN	APVD
	E	REDRAWN PER 0G3A-0427-02	10SEP02	JR	TM

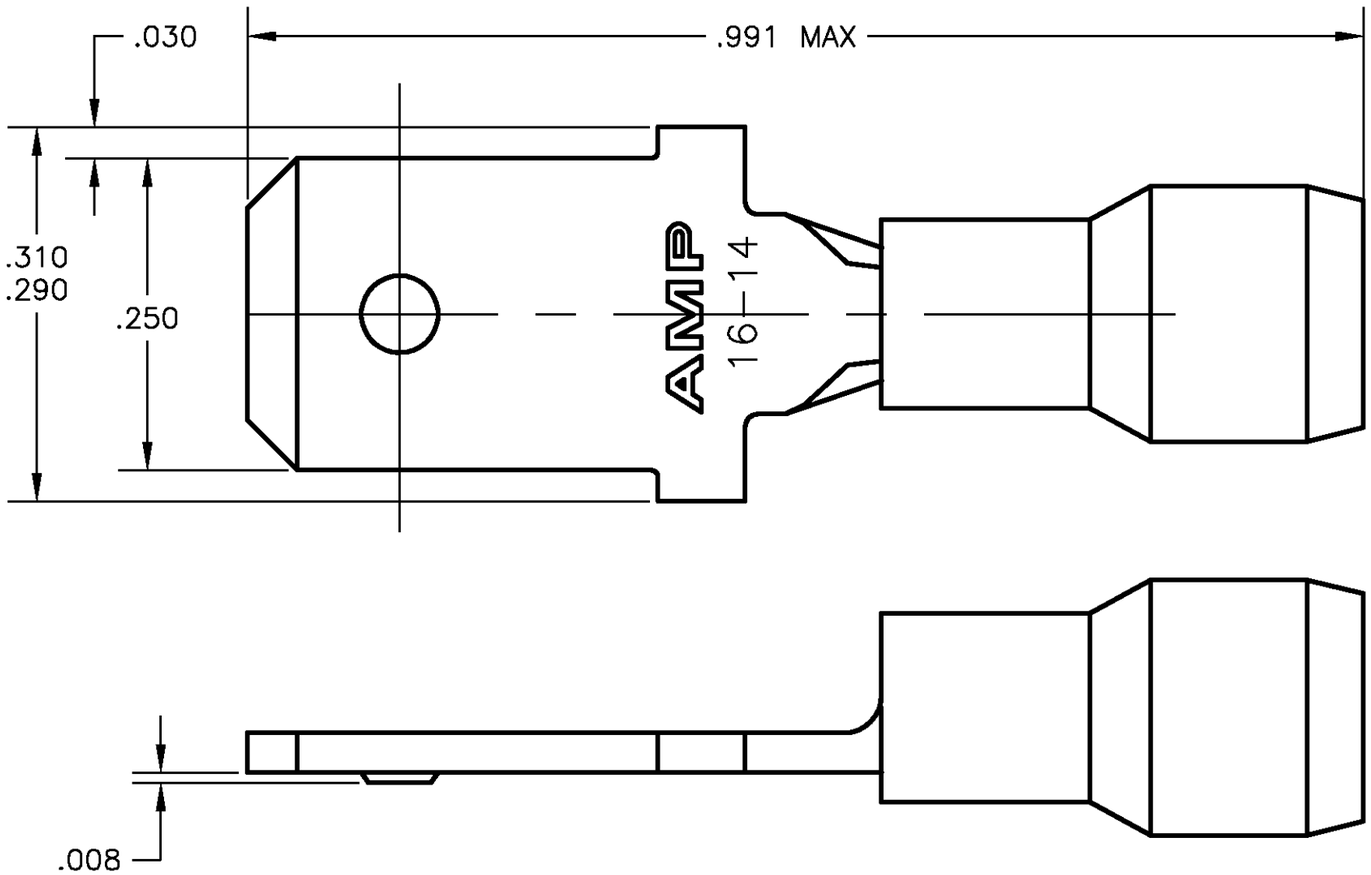

1 STAMPED "AMP 16-14".

2 WIRE INSULATION DIA .115-.170.

3 MATERIAL THK IS .031±.002

QTY	SLEEVE	MATERIAL & FINISH	PACKAGING TYPE	PART NO
100	BLUE, PVC	COPPER, TIN	LOOSE PIECES	66024-6
5000	BLUE, PVC	COPPER, TIN	TAPE MTD	66024-4
500	BLUE, PVC	COPPER, TIN	LOOSE PIECES	66024-2
100	BLUE, PVC	COPPER, NONE	LOOSE PIECES	66024-1

THIS DRAWING IS A CONTROLLED DOCUMENT.

DIMENSIONS: INCHES

TOLERANCES UNLESS OTHERWISE SPECIFIED:

0 PLC	± -
1 PLC	± .1
2 PLC	± .02
3 PLC	± .005
4 PLC	± -
ANGLES	± 1°

MATERIAL: SEE TABLE

FINISH: SEE TABLE

DWN JR RUTH 10SEP2002
CHK T MICHIELUTTI 10SEP02
APVD T MICHIELUTTI 10SEP02
PRODUCT SPEC —
APPLICATION SPEC —
WEIGHT —

CUSTOMER DRAWING

tyco Electronics
Tyco Electronics Corporation
Harrisburg, PA 17105

NAME: PIDG TAB ASSEMBLY
—
—

SIZE	CAGE CODE	DRAWING NO	RESTRICTED TO
A3	00779	C-66024	—

SCALE 8:1 SHEET 1 OF 1 REV E

AMP 1470-19 REV 31MAR2000

C:\ENGapps\TECacad\4.0\bin\