EVAL-ADAS1000SDZ User Guide
UG-426

One Technology Way • P.O. Box 9106 • Norwood, MA 02062-9106, U.S.A. • Tel: 781.329.4700 • Fax: 781.461.3113 • www.analog.com

Evaluating the ADAS1000 ECG Front-End for Demonstration and Development

FEATURES

Biopotential signals in; digitized signals out
6 electrodes (5 acquisition channels and 1 driven lead)
2 × ADAS1000 (master/slave) for 1 to 12 lead electrode measurements
AC and DC lead-off detection
Pace detection
Optional thoracic impedance measurement (internal/external)
Selectable reference lead
Lead or electrode data available
Calibration features (DAC and 1 mV square/sinewave)
Low or high speed data output rates
Serial interface SPI®-/QSPI™-/DSP-compatible

CUSTOMER INTERFACING OPTIONS

Direct access to ADAS1000 serial interface (J4)
USB interface via Analog Devices, Inc., Blackfin®-based SDP-B controller board and GUI

APPLICATIONS

ECG
Patient monitor
Holter monitor
Cardiac defibrillators

GENERAL DESCRIPTION

The primary function of the EVAL-ADAS1000SDZ evaluation board is to demonstrate the ADAS1000 integrated ECG device for medical instrumentation. A full description of the ADAS1000 is available in the data sheet and should be consulted when utilizing this user guide. This evaluation board is used to evaluation the ADAS1000 and all variants.

The evaluation board is ideal for exploring concepts and adopting the ADAS1000 into advanced medical systems. The board can be operated as part of an end user's system via the ADAS1000 SPI interface or as a standalone evaluation of the ADAS1000 using the support of the Analog Devices system demonstration platform controller board (SDP-B), and a standard PC (running Windows® XP, Windows® Vista or Windows® 7 32-bit and 64-bit) to run the Analog Devices evaluation software.

The SDP-B board, which is a DSP-based controller board is separate from the evaluation board, is required to run the Analog Devices evaluation software and is used for data transfer from evaluation board to PC via USB interface. It does not come as part of the evaluation kit and can be ordered separately (EVAL-SDP-CB1Z). It can be reused with many other Analog Devices evaluation modules.

For more information, visit the Analog Devices healthcare home page.

PLEASE SEE THE LAST PAGE FOR AN IMPORTANT WARNING AND LEGAL TERMS AND CONDITIONS.

TABLE OF CONTENTS

Features ... 1
Customer Interfacing Options ... 1
Applications ... 1
General Description ... 1
Revision History ... 2
Conditions Regarding the Use of This Product in Healthcare Applications ... 3
Evaluation Kit Contents ... 3
Hardware Requirements ... 3
Evalution Board Software ... 5
Installing the Software: Overview ... 5
Installing the Software: Details ... 5
Connecting to the Board ... 6
Running the Software ... 6
Evaluation Board Hardware ... 7
Key Features ... 7
Connectors ... 7
Connecting an ECG Signal ... 8
RESET Buttons ... 8
LED ... 8
Jumpers ... 9
ADAS1000 Software Operation ... 10
Quick Operation of ADAS1000 Software ... 10
Detailed Description of Main Control Panel ... 10
Control of all Registers ... 12
ECG Capture ... 14
ECG Capture with Digital Post Processing ... 15
Leads OFF Control ... 16
Respiration ... 17
Pace ... 18
Understanding Pace in the ADAS1000 ... 19
Write to a File ... 20
Test Tones ... 23
Common-Model Level/Wilson Central Terminal ... 25
Detailed Description ... 26
Overview of Schematics ... 26
Pace Interface (Optional) ... 26
Power ... 26
Flexible Respiration Feature on Master ADAS1000 ... 27
Troubleshooting ... 33
Clamp ... 34
Evaluation Board Schematics ... 35

REVISION HISTORY

3/14—Rev. 0 to Rev. A

Changed ADAS1000SDZ to EVAL-ADAS1000 SDZ Throughout ... Universal
Change to Title ... 1
Changes to Figure 46 ... 35
Changes to Figure 52 ... 41
Changes to Figure 53 ... 42

8/12—Revision 0: Initial Version

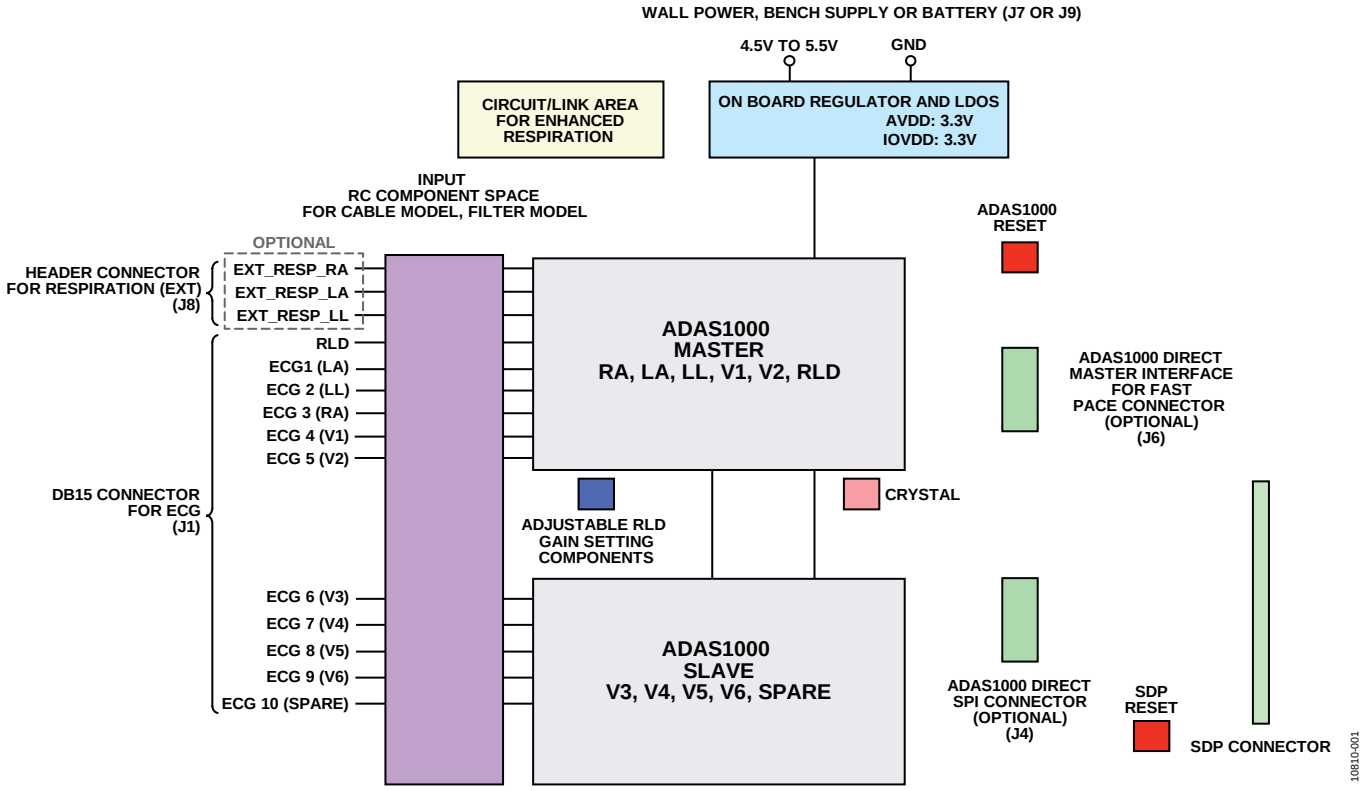

Figure 1. Functional Block Diagram

CONDITIONS REGARDING THE USE OF THIS PRODUCT IN HEALTHCARE APPLICATIONS

In addition to the terms found at the end of this document, the following shall also apply to your use of the board and design:

This evaluation board design is being provided "as is" without any express or implied representations or warranties of any kind and the use of this board or design shall impose no legal obligation on Analog Devices, Inc., and its subsidiaries, employees, directors, officers, servants and agents. In addition, it is understood and agreed to that the evaluation board or design is not authorized for use in safety critical healthcare applications (such as life support) where malfunction or failure of a product can be expected to result in personal injury or death. This board must not be used for diagnostic purposes and must not be connected to a human being or animal. It must not be used with a defibrillator or other equipment that produces high voltages in excess of the supply rails on the board.

This evaluation board is provided for evaluation and development purposes only. It is not intended for use or as part of an end product. Any use of the evaluation board or design in such applications is at your own risk and you shall fully indemnify Analog Devices, Inc., its subsidiaries, employees, directors, officers, servants and agents for all liability and expenses arising from such unauthorized usage. You are solely responsible for compliance with all legal and regulatory requirements connected to such use.

EVALUATION KIT CONTENTS

- EVAL-ADAS1000SDZ board
- Medical-grade universal ac-to-dc wall adaptor (+5 V)
- CD that includes
  - Self-installing graphical user interface (GUI) software that allows users to read/write to ADAS1000 and to stream data
  - Electronic version of the ADAS1000 data sheet
  - Electronic version of the EVAL-ADAS1000SDZ documentation

HARDWARE REQUIREMENTS

- Power supply: +5 V (ac-dc adaptor provided)
- Patient simulator or similar device
- SDP board, a controller board for data transfer to PC. This can be ordered separately (EVAL-SDP-CB1Z)

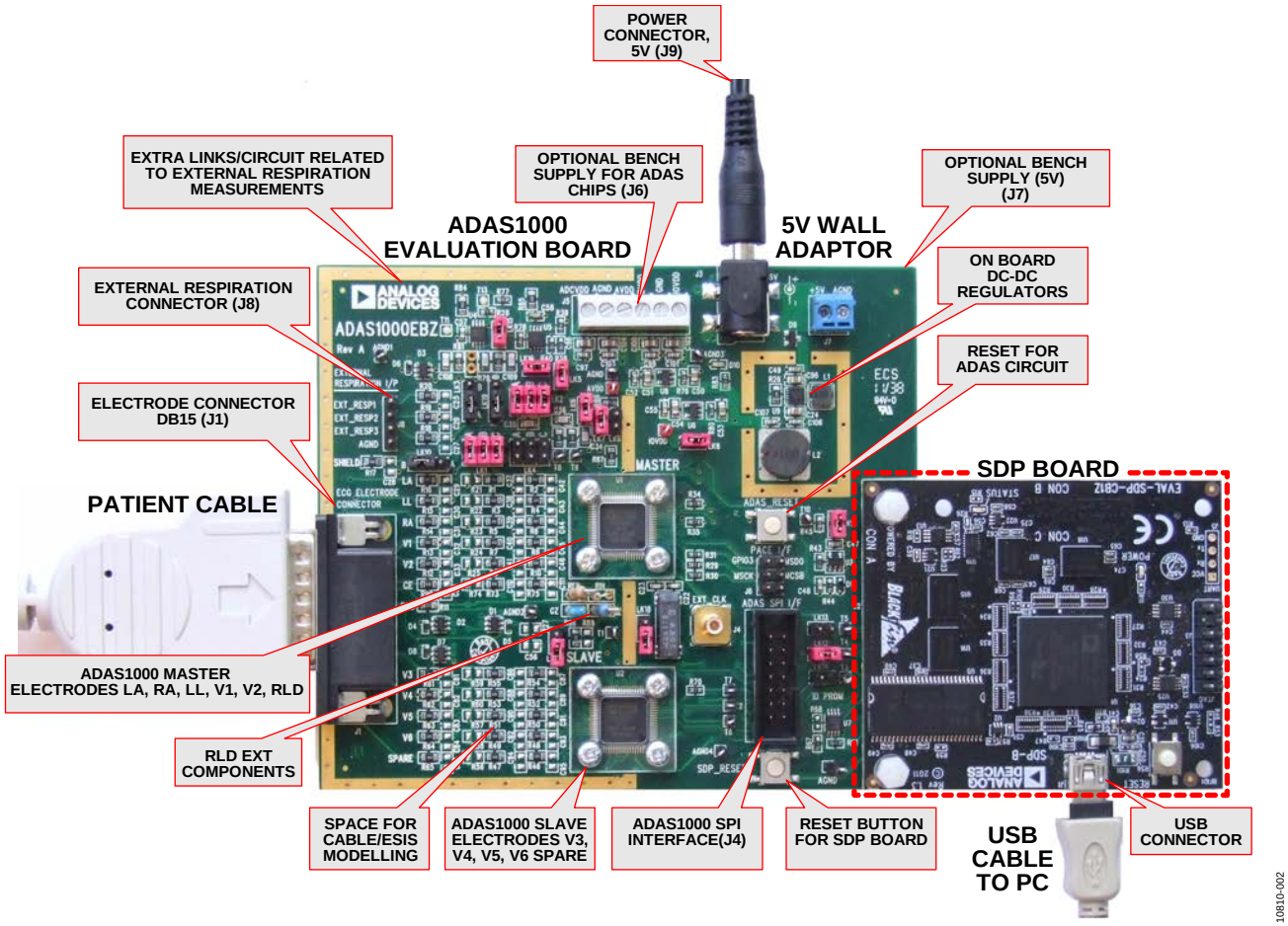

Figure 2. ADAS1000 Evaluation Board/SDP Board

EVALUTION BOARD SOFTWARE

INSTALLING THE SOFTWARE: OVERVIEW

The EVAL-ADAS1000SDZ kit includes self-installing software on CD.

Install the software prior to connecting the SDP board to the USB port of the PC. This ensures that the SDP board is recognized when it connects to the PC.

1. Start the Windows operating system and insert the CD.
2. The installation software should launch automatically. If it does not, run the **setup.exe** file from the CD.

INSTALLING THE SOFTWARE: DETAILS

Proceed through the installation steps allowing the software and drivers to be placed in the appropriate locations. Connect the SDP board to the PC only after the software and drivers have been installed.

There are two parts to the software installation procedure. The first part is installing the software related to the ADAS1000 evaluation board as shown in Figure 3.

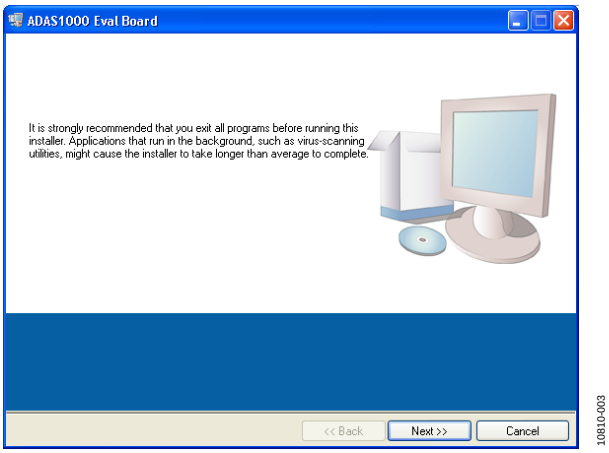

Figure 3.Getting Started with the Software Installation

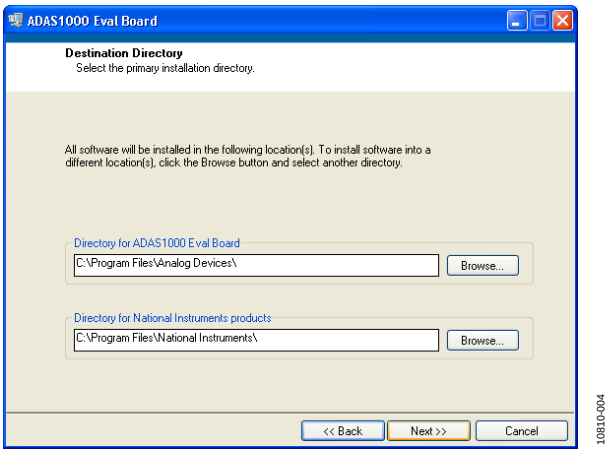

Figure 4. Destination Directory

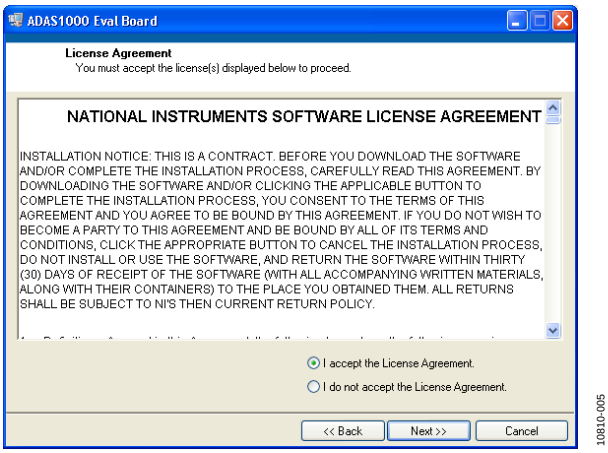

Figure 5. License Agreement

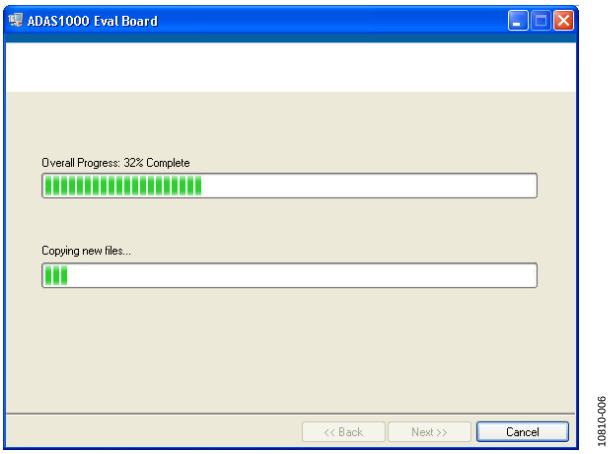

Figure 6. Monitoring Progress

Now, install the software related to the SDP controller board (see Figure 7).

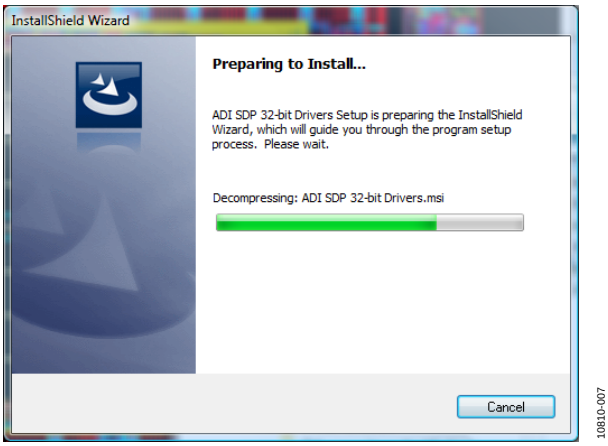

Figure 7. SDP Software Install

Plug in the SDP board via the USB cable provided and allow the new **Found Hardware Wizard** to run; this detects and loads drivers for the SDP board. If necessary, check that the drivers and the board are connected correctly by looking at the **Device Manager** of the PC.

The **Device Manager** can be found by right clicking on **My Computer** > **Manage** > **Device Manager** from the list of **System Tools**. The SDP board should appear under **ADI Development Tools**.

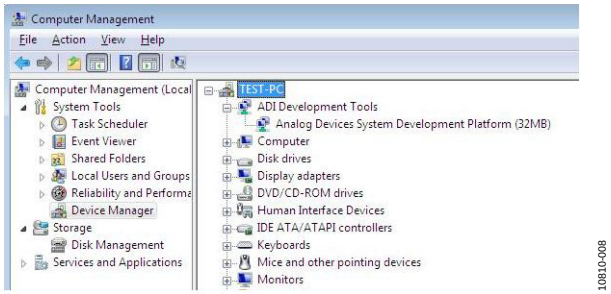

Figure 8. Device Manager

CONNECTING TO THE BOARD

Follow these steps to power up and start interfacing to the board using the software:

1. After installation is completed, plug the EVAL-ADAS1000SDZ into the SDP controller board using J2 of the ADAS1000 board; use the plastic screws provided on the ADAS1000 evaluation board to fix the two boards securely in place.
2. Power up the evaluation board as described in the Evaluation Board Hardware section and the Power Connections section. D10 and LED1should appear lit.
3. Plug the SDP board into the PC using the USB cable included in the box.
4. When the software detects the evaluation board, proceed through any dialog boxes that appear in order to finalize the installation.

RUNNING THE SOFTWARE

Follow these steps to run the program:

1. Select **Start** > **All Programs** > **Analog Devices** > ADAS1000 > ADAS1000_**Software**. To uninstall the program, select **Start** > **Control Panel** > **Add or Remove Programs** > ADAS1000_**Software**.

If the SDP board is not connected to the USB port when the software is launched, a connectivity error is displayed (see Figure 9). Simply connect the evaluation board to the USB port of the PC, wait a few seconds, click **Rescan**, and follow the instructions that appear.

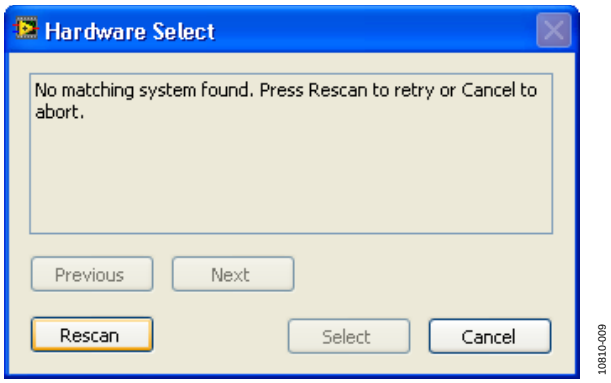

Figure 9. Pop-Up Window Error

2. When the board is found, click **Select**.

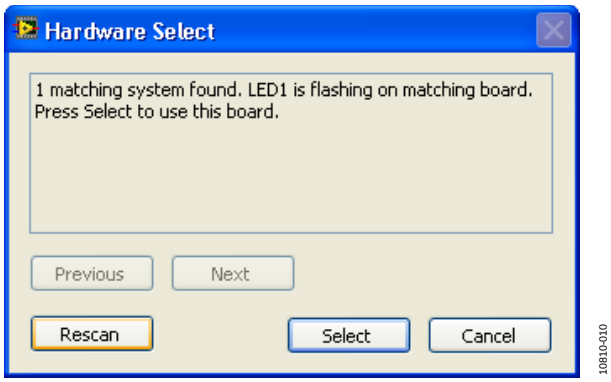

Figure 10. Hardware Selection

The software connects to the board and displays the following:

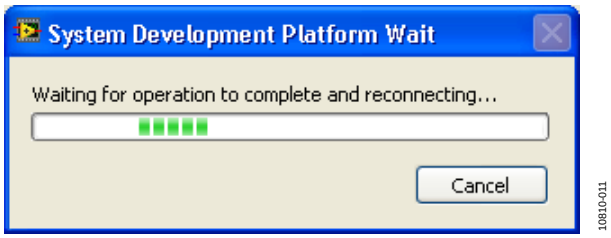

Figure 11. Wait Message

Once the board has been correctly detected, the ADAS1000 panel opens (see Figure 13).

EVALUATION BOARD HARDWARE

KEY FEATURES

- 5 or 10 ECG electrode paths capable of demonstrating 1-lead to 12-leads of ECG data
- AC and DC lead off detection
- Respiration and pace measurement and display
- Calibration features and display
- Test tones
- Real-time ECG electrode or lead display on PC screen via Analog Devices ADAS1000 GUI (lead calculation available).
- Recording of ECG data for offline review

Power Connections

There are a number of options for supplying power to the board. The simplest is directly from the J9 dc jack connector with the wall adapter which is provided as part of the kit.

Choose one of the following:

- J9: dc jack–requires 5 V at 250 mA. Note that this provides power to the SDP board in addition to the ADAS1000 related circuitry.
- J7: screw terminal (2 inputs)–requires 5 V at 250 mA. Provides power to the on-board dc-dc convertors which supply all circuitry on board and also powers the SDP board.

Alternatively, choose

- J5: screw terminal (6 inputs). These inputs are optional supply inputs for the ADAS1000 devices and the remainder of the circuitry on the board
  - AVDD = 3 V to 5.5 V
  - IOVDD = 1.65 V to 3.6 V
  - AGND = DGND = 0 V
  - ADCVDD and DVDD are optional supplies. They can be supplied from the ADAS1000 on-chip regulators. Alternatively, the regulators can be disabled and the user can drive ADCVDD and DVDD directly via J5. If ADCVDD and DVDD are driven directly, then the following supplies are required.
    - ADCVDD (optional) = 1.8 V
    - DVDD (optional) = 1.8 V

Table 1. Power Supply Connection (Choose Only One)

Supply Requirement	Parameter	Supply Range
Primary Supply (J7 or J9)	+5 V	4.5 V to 5.5 V (may be supplied from wall adaptor, battery or bench supply) If applied, this is the only supply rail required by the board.
Alternative Supplies (J5)	AVDD	+3 V to +5.5 V
	IOVDD	1.65 V to 3.6 V
	ADCVDD	1.8 V ±5%
	DVDD	1.8 V ±5%

CONNECTORS

Electrode Connector–J1

This connector provides the primary analog input interface to which customer proprietary lead sets are connected.

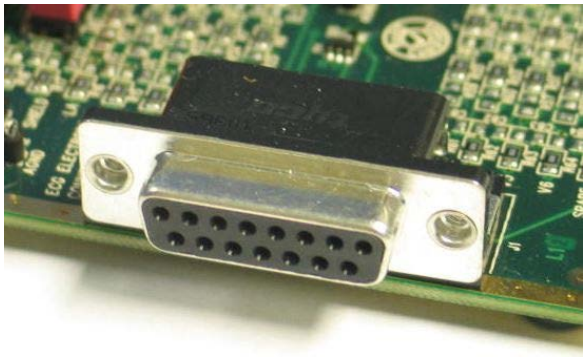

Figure 12. J1, DB15 Connector

Connector J1 is a DB15 female connector and mates with a D-SUB plug. All ADAS1000 electrode connections are made available here for both master and slave devices in addition to the Right Leg Drive (RLD_OUT) and Shield Drive (SHIELD) pins.

Note that every effort was made to supply input protection to the electrode pins sufficient for the application; however, the intent was not to offer this module as a true medical solution. Therefore, no defibrillation pulses or voltages outside the ADAS1000 operating range should be applied to the input connector/board.

CONNECTING AN ECG SIGNAL

The user needs to connect a signal source to the evaluation board connector J1 for measurement purposes. Ideally, this would be a patient simulator. In demonstrations at Analog Devices, the PS420 patient simulator (from Fluke Biomedical Division of Fluke Electronics Corporation) is used.

Note that the board is not designed for direct connection to patients or animals for testing.

Users should connect the appropriate signal to the ECG electrode inputs and RLD_OUT electrode.

Table 2. Electrode Connector, J1

Pin No.	Mnemonic	Description
1	V2	Analog input, Master ECG5_V2
2	V3	Analog input, Slave ECG1_V3
3	V4	Analog input, Slave ECG2_V4
4	V5	Analog input, Slave ECG3_V5
5	V6	Analog input, Slave ECG4_V6
6	SHIELD	Output of shield driver
7	CE	Common electrode, Master CM_IN
8	NC	Not connected
9	RA	Analog input, right arm, Master ECG3_RA
10	LA	Analog input, left arm, Master ECG1_LA
11	LL	Analog input, left leg, Master ECG2_LL
12	V1	Analog input, Master ECG4_V1
13	Spare	Analog input, chest electrode or auxiliary bio-potential input, Slave ECG5
14	RLD	Right leg drive, RLD_OUT
15	NC	Not connected

SDP Interface Connector, J2

The purpose of this connector is to facilitate interfacing with the Analog Devices SDP1Z control board which is USB controlled. This control board is specific to the operation of this module as a standalone evaluation and learning platform. This connector is not intended for customer-specific interfacing.

Main ADAS SPI, J4

This connector provides the ADAS1000 digital interface pins so that the device may be used in standalone mode (without the SDP control board). The user may use this connecter to interface to the device in order to develop their own code and evaluate the ADAS1000 directly.

Note that on the board, the /CS, SDI, and SDO paths for each device are separate for ultimate flexibility in control of the devices. When controlled via the SDP board, the /CS line is shared (LK12 inserted). When using multiple devices, the SDI and SDO paths can be shared, and each device can be controlled via its own /CS line, allowing for easy control with minimum wires.

Table 3. SPI Connector, J4

Pin No.	Mnemonic	Device	Description
1	$\overline{PD}$	both	Power down, active low
2	$\overline{RESET}$	both	Device reset, active low
3	SDI_1	slave	Serial data input
4	SDI_0	master	Serial data input
5	SDO_1	slave	Serial data output
6, 12, 13, 14	DGND	both	Digital ground
7	SDO_0	master	Serial data output
8	$\overline{CS}$_0	master	Chip select master
9	$\overline{CS}$_1	slave	Chip select slave
10	SCLK	both	Clock input
11	$\overline{DRDY}$	master	Data ready, active low

Timing Characteristics

Refer to the ADAS1000 product data sheet for information regarding the required waveforms and behavior of the SPI interface pins when preparing to interface directly to the ADAS1000 SPI interface.

Pace Interface/GPIO Connector, J6

This connector provides the optional secondary interface available from the master device for the purposes of the customer-based digital pace detection algorithm. It is a master interface providing MSCLK, MSDO, and $\overline{MCS}$ outputs to be read by a host controller. It provides ECG data captured at 128 kHz data rate.

Pin No.	Mnemonic	Description
1	GPIO3	Reconfigurable IO
2	GPIO2/MSDO	Reconfigurable IO/master interface MSDO
3	GPIO1/MSCK	Reconfigurable IO/master interface MSCK
4	GPIO0/$\overline{MCS}$	Reconfigurable IO/master interface $\overline{MCS}$
5, 6	DGND	Digital ground

RESET BUTTONS

There are two reset buttons on the board. SDP reset is used for a reset of the SDP board and ADAS reset is used for reset of ADAS1000 devices to default/power-on configuration.

LED

There is one LED (D10) on the board, which is lit when the board is powered from J7 (+5 V connector).

JUMPERS

There are a number of jumpers included on this board for flexibility and ease of configuration. These jumpers allow the user to easily drive the main ADAS1000 SPI interface directly without concern about other SPI-controlled components. On receipt of the board, the jumpers are in the default state as described in Table 4.

Table 4. Default State of Jumpers

Jumper	Jumper	Description	Condition
Respiration	LK1	External Respiration Measurement. LK1 is used to connect the EXT_RESP_XX paths to the ECG channels external to the device (requires that LK4 be connected if using the external paths).	A, B, C inserted
	LK2	External Respiration Measurement. LK2 is used when using external capacitors for the respiration circuit; LK1 needs to be closed also (and, optionally, LK4).	A, B, C inserted
	LK3	External Respiration Measurement. LK3 is used to bring either of the ECG channels (LA or LL) to the input of the AD8226 in-amp (part of an optional respiration circuit).	Inserted (A)
	LK4	External Respiration Measurement. LK4 connects the external respiration paths to the respiration header or, alternatively, to the ECG paths via LK1.	Open
	LK19	External Respiration Measurement. Connect (A) when using external respiration circuit (AD8226 and AD8606). Can be disconnected for all other respiration options.	Inserted (A)
	LK15	For External Respiration Using an External Instrumentation Amplifier (Optional Circuit). The evaluation board uses the AD8226 along with a buffer, AD8606. This arrangement allows the output of the amplifier to drive the EXT_RESP_RA input. Use with LK16.	Closed
	LK16	For External Respiration Using an External Instrumentation Amplifier (Optional Circuit). The evaluation board uses the AD8226 along with a buffer, AD8606. This arrangement allows the output of the amplifier to drive the EXT_RESP_LA input. Use with LK15.	Closed
Power Supply	LK6	AVDD Path from On-Board LDO (ADP151). Open if powering the board from J5 screw terminals. Closed if supply board from either wall adaptor input or J7 (5 V) supply input.	Closed
	LK7	AVDD Path to MASTER ADAS1000. Use to measure supply current in AVDD path to MASTER ADAS1000.	Closed
	LK8	IOVDD Path from On-Board LDO (ADP151). Open if powering the board from J5 screw terminals. Closed if supply board from either wall adaptor input or J7 (5 V) supply input.	Closed
VREG EN	LK9	VREG_EN–ADAS1000 On-Chip Regulators (DVDD, ADCVDD). They are enabled when VREG_EN is high, disabled when low, and may be overdriven. If overdriving, close LK9 and use J5 to supply DVDD and ADCVDD supply rails (1.8 V).	Open
	LK17	ADCVDD net is shared to both MASTER and SLAVE. This allows an external ADCVDD to be applied. Each ADAS1000 has its own on-chip regulator for ADCVDD. If both MASTER and SLAVE are inserted on board and LK9 is open, then LK17 should be open.	Open
	LK18	Each ADAS1000 has its Own On-Chip Regulator for DVDD. If both MASTER and SLAVE are inserted on board and LK9 is open, then LK18 should be open (to stop the regulators trying to fight each other).	Open
Shield	LK10	Link in Shield Path. The Shield pin is a shared pin with the external respiration drive for LA. Therefore, when using the SHIELD drive directly, the user can connect LK10 to Link A. Alternatively, if using external respiration feature, the user can connect the shield of the patient cable directly to GND by inserting LK10 in Position B.	Inserted (B)
Reset Function	LK11	Link in Reset Path.	Closed
Interface	LK12	When using the SDP board, both MASTER and SLAVE are driven with the same CSB (LK12 inserted). If driving the MASTER and SLAVE from J4, open LK12.	Closed
	LK13	When using the SDP board, both MASTER and SLAVE drive different SD0 paths (LK13 open).	Open
	LK14	When using the SDP board, both MASTER and SLAVE are driven with different SDI paths (LK14 open). If driving the MASTER and SLAVE from J4 and the same SDI path, close LK14.	Open

ADAS1000 SOFTWARE OPERATION

QUICK OPERATION OF ADAS1000 SOFTWARE

1. Launch the ADAS1000 software. The main panel shown in Figure 13 opens.
2. Click **Default Settings** to power up the ADAS1000, configuring the device into a known condition.
3. To start streaming ECG data, go to **Stream ECG** and a pop-up window (see Figure 18) opens and the GUI automatically starts reading ECG data from the board.

DETAILED DESCRIPTION OF MAIN CONTROL PANEL

When the software is launched, the main window of the EVAL-ADAS1000SDZ software opens, as shown in Figure 13.

The evaluation board automatically detects if LK12 is inserted, so it knows if it needs to read from a single device (master, LK12 = open) or from both devices (master and slave, LK12 = inserted).

On the main panel, the user can access pop-up windows which allow access to all register controls, streaming (ECG, respiration, pace, and lead off), and the write to file window.

The ADAS1000 powers up with channels disabled and in power-down mode. A number of writes are required to different registers to start the device up and begin streaming data from the device.

Within the main window, there is a **Default Settings** button which allows quick configuration of the device. This configures the ECGCTL, CMREFCTL, and FRMCTL registers as shown in Table 5. All other registers remain at their power-on default settings.

When finished using the software, click **QUIT** to close the window.

Table 5. Commands Sent to Master Device by Default Settings Button

Register	Word	Conditions
ECGCTL	0xF800BE	All ECG channels enabled. Single-ended input. Gain setting, GAIN 0 = 1.4. VREF buffer enabled. Low noise/high performance mode. Convert enabled.
CMREFCTL	0xE0000A	LA, LL, RA are selected to contribute to VCM. Reference drive is enabled and applied to RLD_OUT electrode. Internal common mode is used and driven out on CM_OUT. Shield drive is enabled.
FRMCTRL	0x079000	Frame includes: all ECG words, pace detect, respiration magnitude, leads off, GPIO, and CRC. Data format is vector mode. Every frame is output at frame rate of 2 kHz.

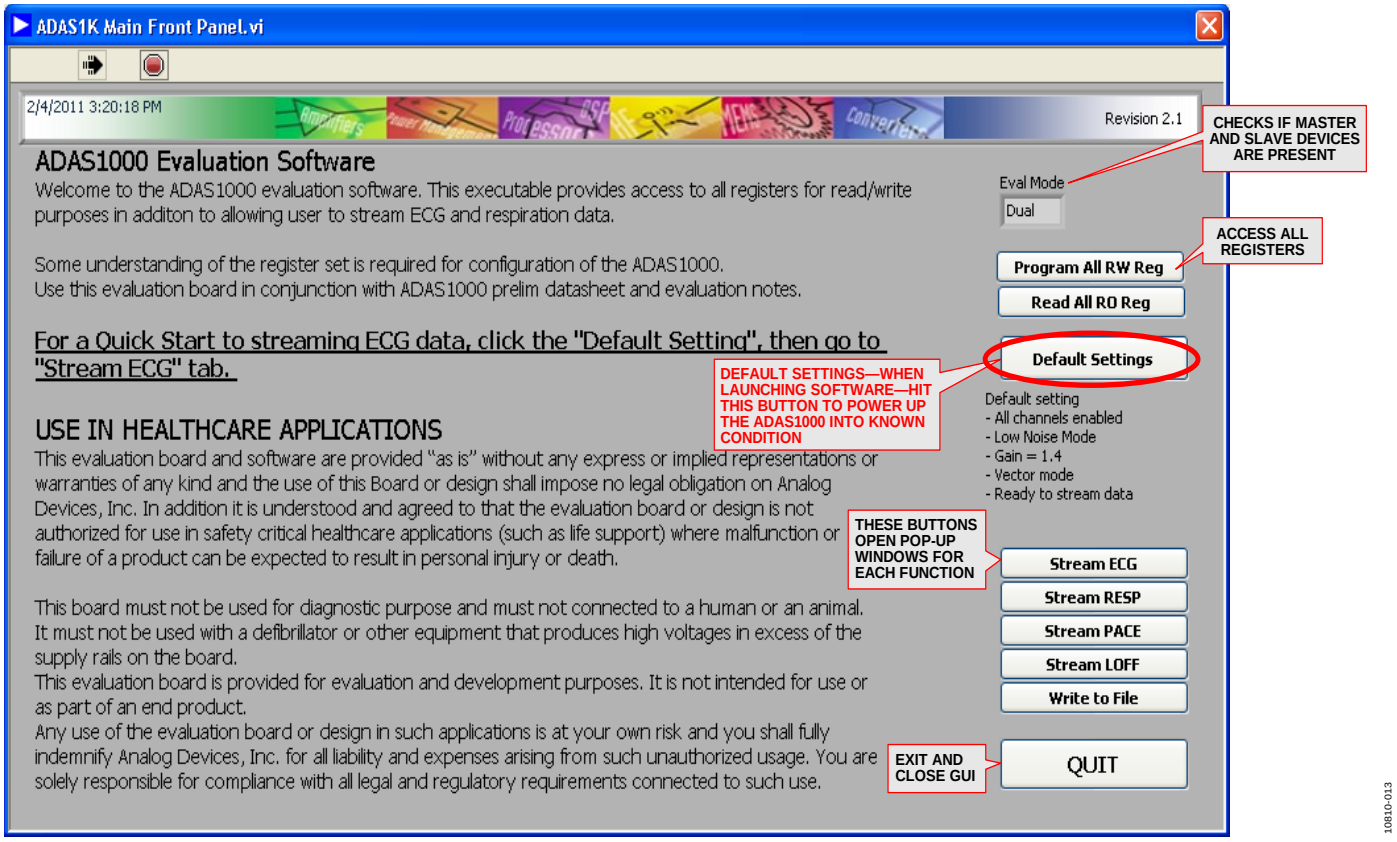

Figure 13. Main Evaluation Board Control Window

CONTROL OF ALL REGISTERS

To delve further into the register control, click **Program All RW Reg** from the main control panel. This launches a pop-up window giving access to different tabs for each control register.

When moving back and forth between tabs, note that each time you click on a tab, the device reads the appropriate register and updates the Read register listing accordingly.

- A **Write Read Reg** writes the data in the write panel and reads back all the registers to confirm the write.
- Caution: the write panel may not match the contents of the ADAS1000 registers, so if using this panel to update particular registers, quickly do a **ReSync Write Reg** first to ensure that the write and read panels match, and then proceed to make your changes.
- Update the register contents with any changes.
- Click **Default Settings** to return the part to the default state.
- Save a register setting for reload and reuse later using the **Save Reg State** and **Load Reg State**.
- When finished with this window, click **QUIT** to close the window.

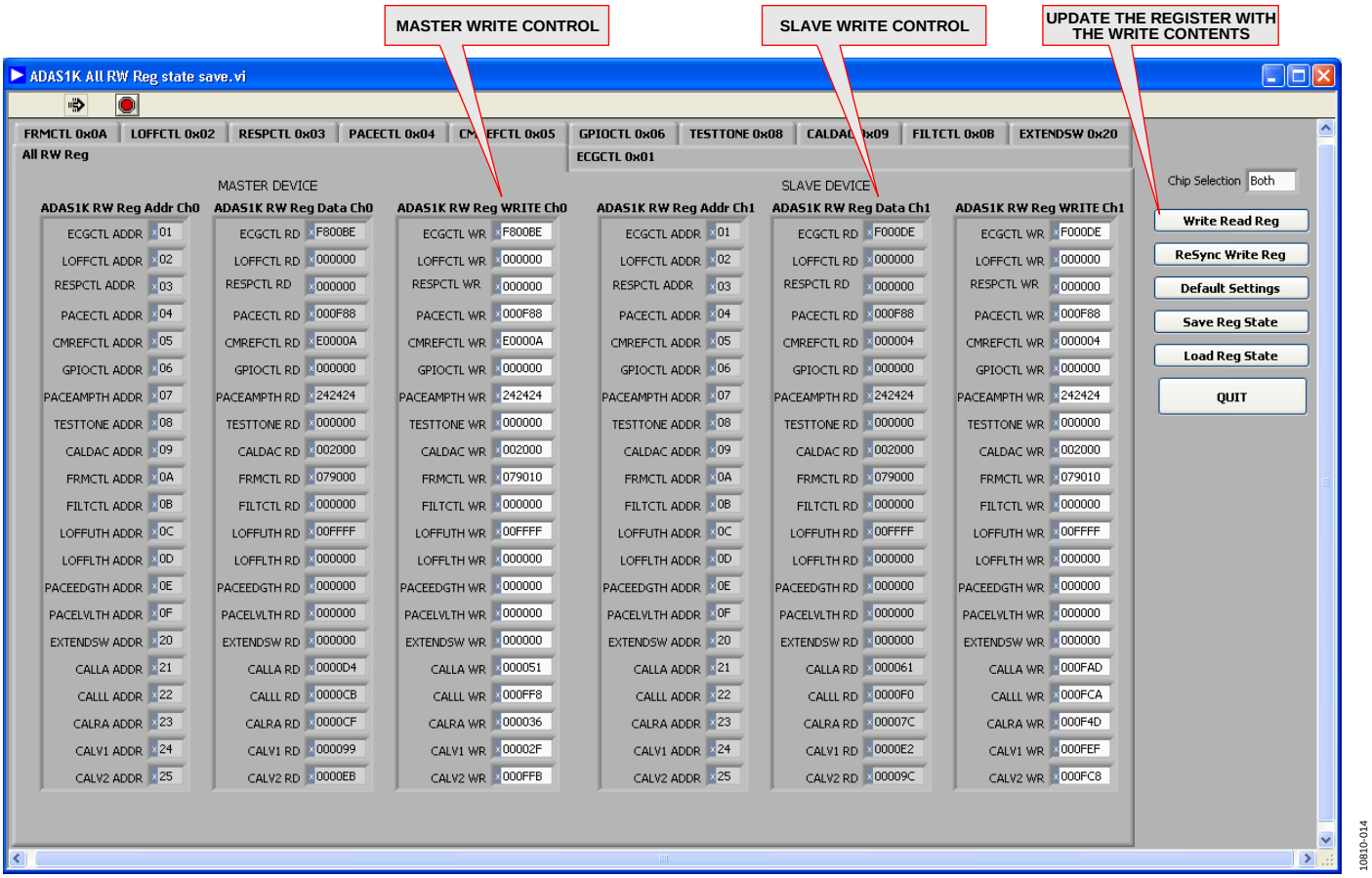

Figure 14. Read/Write Control Register Overview

Within the tabs of this window all the individual control registers can be accessed. The ECG control register is shown in Figure 15, giving access to master and slave control. Note that for certain conditions, the slave device must match the master device configuration. As a result, the software locks out some of the slave control to ensure that the settings of the master and slave will always match (for example, gain setting, high performance mode, clock source, and so on).

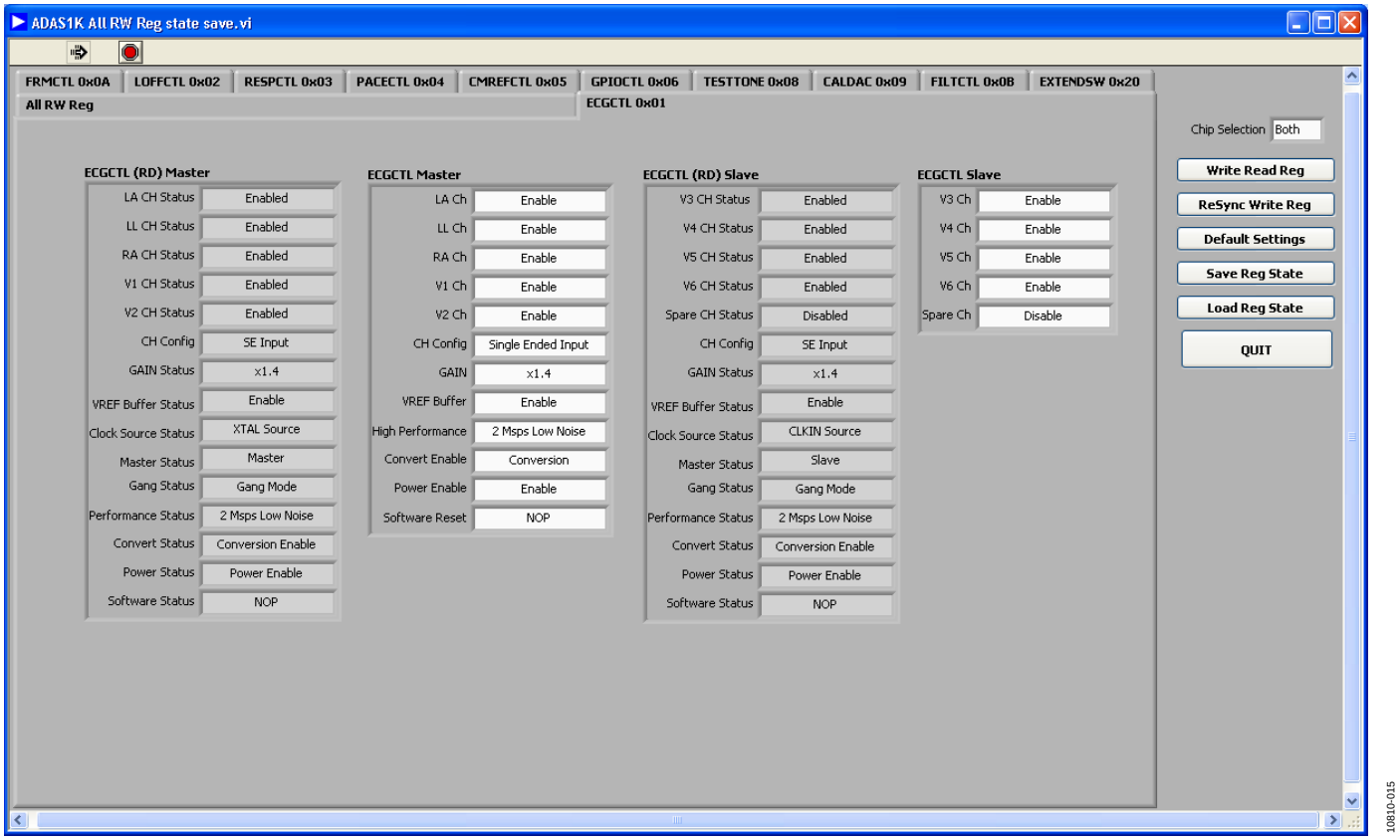

Figure 15. ECG Control Register

ECG CAPTURE

The ECG Capture tab allows users to view the ECG patterns at the different data rates, in vector or electrode mode.

The tab panel on the right allows quick, easy configuration of the different parameters—filter, data rate, power mode, vector/electrode in the panel on the right.

1. Once the appropriate registers are configured to start a capture, proceed to the ECG capture window. The ADAS1000 starts streaming ECG data. The signal shown in Figure 16 is a 60 bpm signal coming from the Fluke PS420 simulator.

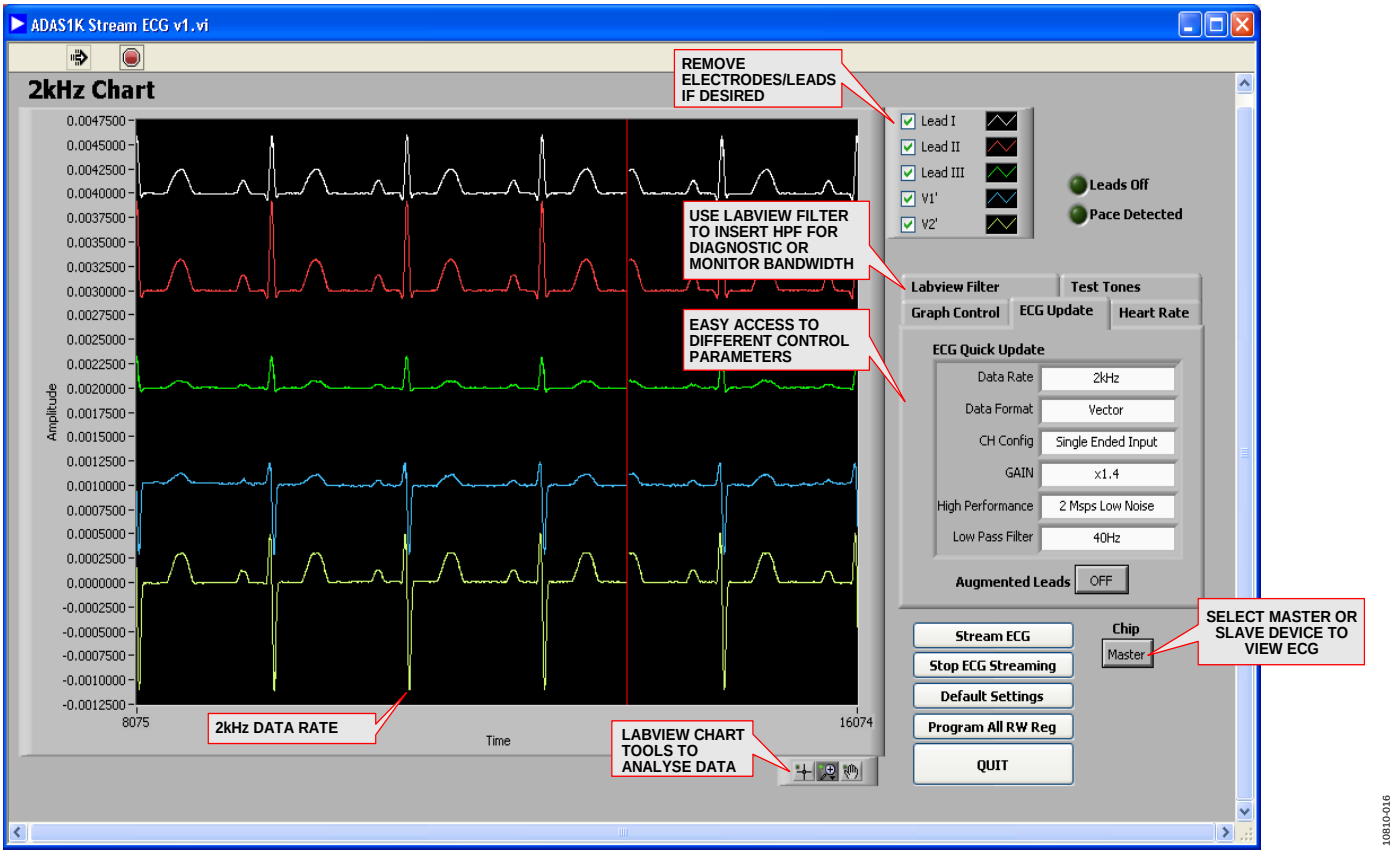

Figure 16. ECG Capture Window with Extra Filtering

- Quick settings allow the user control over the common features, such as data rate, electrode/vector data, gain, and filter frequency.
- This particular display is set up for lead (vector) display.
- There is a tab that allows users to apply LabVIEW® filters.
- There is also a tab that allows user to view the captured heart rate.

2. To zoom in on data to view in more detail, the LabVIEW chart tools are available for use. Simply stop streaming and then use the graph zoom for X or Y to zoom in the chart of interest. Rescaling of the Y-axis can also be done by first right clicking and turning off the autoscale feature.

ECG CAPTURE WITH DIGITAL POST PROCESSING

The ECG capture window allows the user to use a LabVIEW filter (0.05 Hz) to view diagnostic bandwidth in addition to ac coupling the signal (using LabVIEW VI).

1. Insert a LabVIEW HPF for ac coupling. (ADAS1000 is a dc coupled design).
2. Insert a LabVIEW HPF or 0.5 Hz or 0.05 Hz.

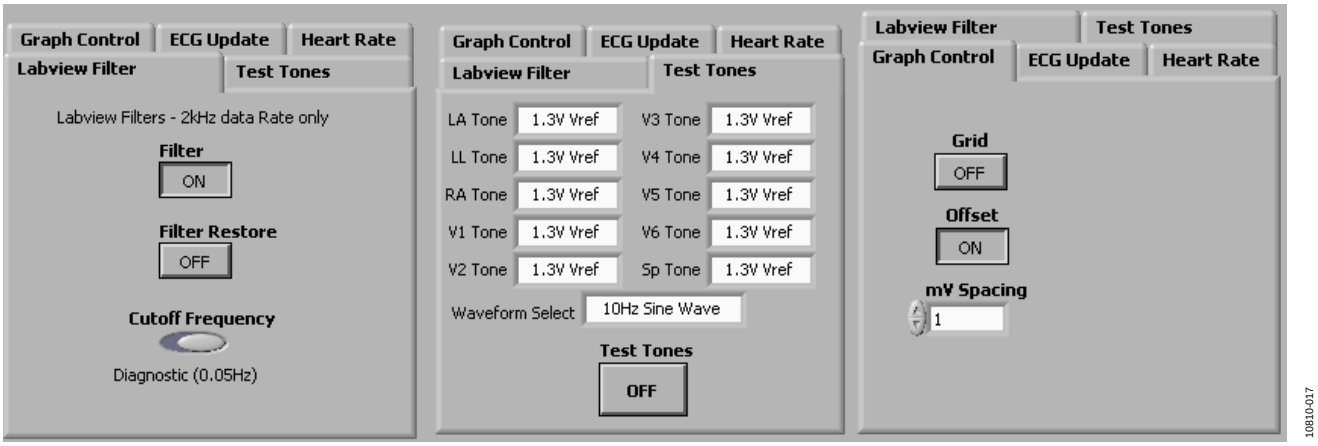

Figure 17. Different Tabs Providing Differing Controls Within the ECG Capture Window. Controls include: LabVIEW filters, the test tone feature, and graph control, respectively.

3. Note that the software also allows users to detect heart rate. This applies to LEAD II (see Figure 18).
4. When finished with the ECG capture window, click **QUIT** to close the window.

Figure 18. ECG Capture Window with Heart Rate Shown

LEADS OFF CONTROL

The lead off tab allows the user to control which lead off feature is operating (ac or dc) and programs the current and threshold levels. For dc lead off, remember the VCM is 1.3 V; therefore the upper threshold should be in excess of 1.3 V to ensure capture of a lead off event.

For ac lead off, the threshold levels are represented in terms of amplitude by multiplying π/2. Note that the levels may need to be adjusted to find the appropriate levels to detect ac leads amplitude.

1. Configure the mode of lead off detection (either ac or dc).
2. Set the current levels.
3. Program the threshold levels of the detection circuitry (applies to ac lead off).
4. Write the changes to the register by clicking **Update,** which is available within the **LOFF Threshold Levels** tab.
5. When finished, click **QUIT** to close the window.

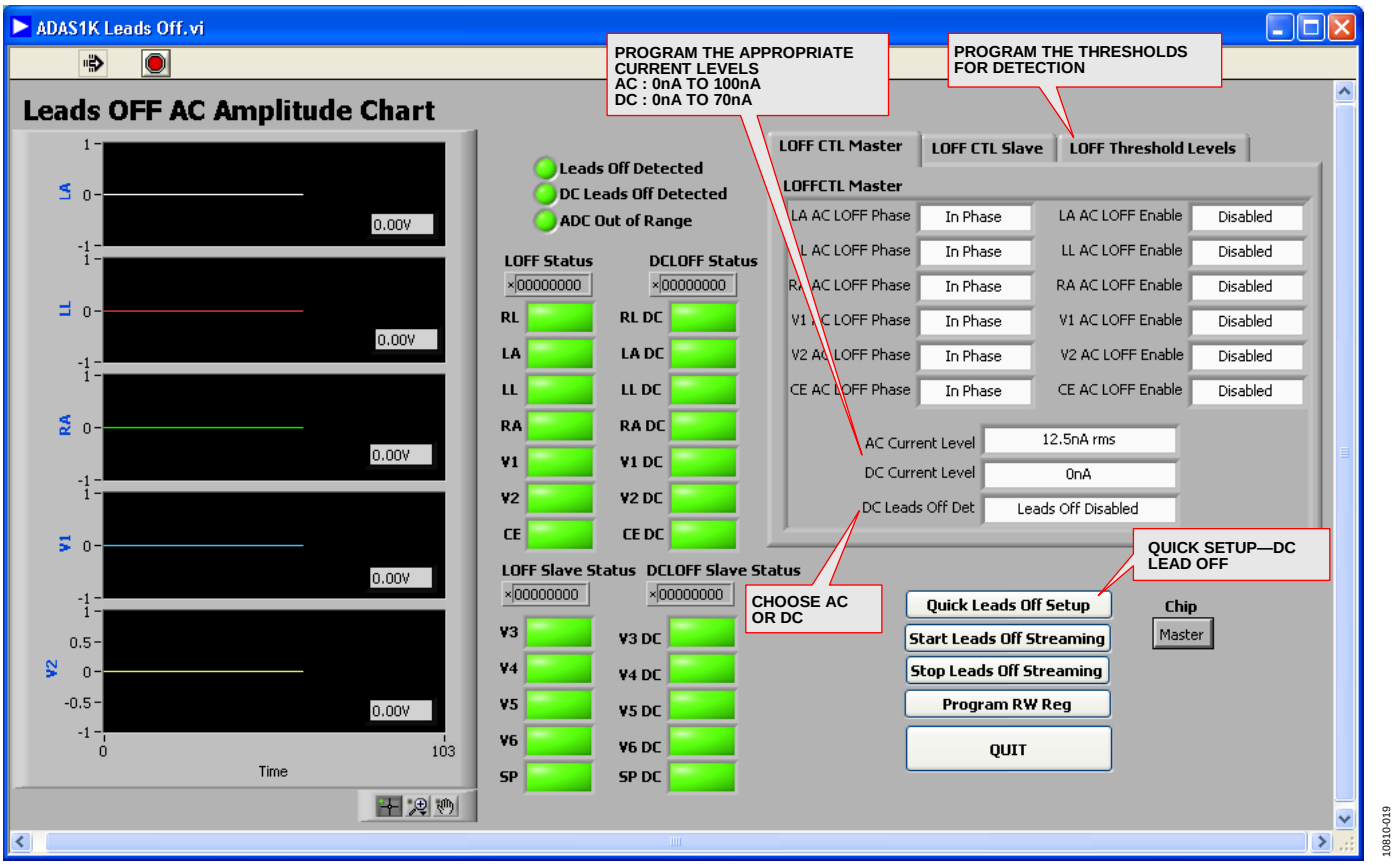

Figure 19. Leads Off Control and Display Chart

RESPIRATION

The Respiration window allows configuration of the respiration feature and display of the respiration rate.

1. Use **Quick Respiration Setup** to quickly configure the device. Figure 20 shows the respiration signal capturing a respiration signal provided by the Fluke PS420.
2. Configure the settings in the respiration register for many different options. See Figure 20 and see the Flexible Respiration Feature on Master ADAS1000 section for a description.
3. When finished, click **QUIT** to close the window.

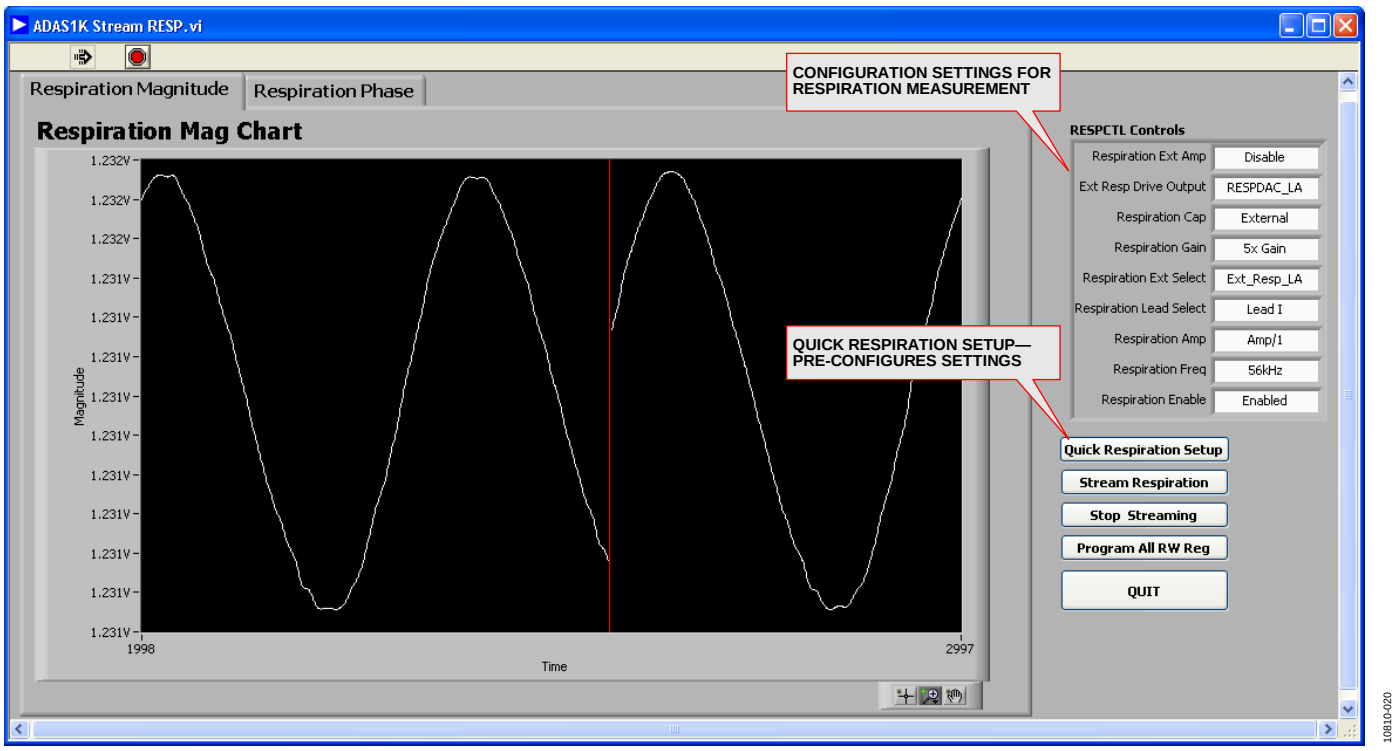

Figure 20. Respiration Magnitude Chart

PACE

The Pace register control offers a number of different features. The pace algorithm is three instances of a digital algorithm, therefore it can run on 3 leads at one time. The algorithm is designed to detect pace widths that range from 100 µs to 2 ms and amplitudes of 400 µV to 1000 mV. For pace capture, the software is streaming data at the chosen data rate. The data rate chosen does not have an effect on the ability of the pace detection algorithm to detect a pulse since the pace algorithm always processes the 128 kHz frame rate.

1. Choose which lead each pace algorithm analyses.
2. Configure the different threshold levels for the desired ranges.
3. Use **Quick Pace Setup** to program the pace control and thresholds to default levels, and to start to stream pace data.
   When a pace signal is detected, the frame header flags it. The pace algorithm makes a measure of the height and width of the detected pace and provides that information for readback. There are two ways of returning the width and height information from the register reads, one from within the frame and another from a direct read of the pace height/width register which is a more accurate result. Pace Validation Filter 1 and Filter 2 are for noise and MV pulse filtering. The pace width filter rejects signals <100 µs and >2 ms.
4. If using the 2 kHz data rate, the pace signal may be filtered out by the programmable LPF available in this data rate. Adjust the **Low Pass Filter** setting to allow the pace signal to be more visible.
   Note there are three pace algorithms and three pace windows to view. Each algorithm has its own threshold register settings.
5. When finished, click **QUIT** to close the window.

Figure 21. Pace Window

UNDERSTANDING PACE IN THE ADAS1000

Consult the ADAS1000 data sheet for full details on the pace detection operation. Under **Pace Controls,** as shown in Figure 21, a user has access to set up three different instances of pace to analyse the particular leads of interest (choices of LEAD I, II, III, and VF).

The pace algorithm is a state machine that operates on the 128 kHz 16-bit data. When enabled, it works to identify the leading edge and trailing edge of the pace pulse and can output the width and height of that pulse as detected on the surface of the skin.

The configuration registers are shown in Figure 22.

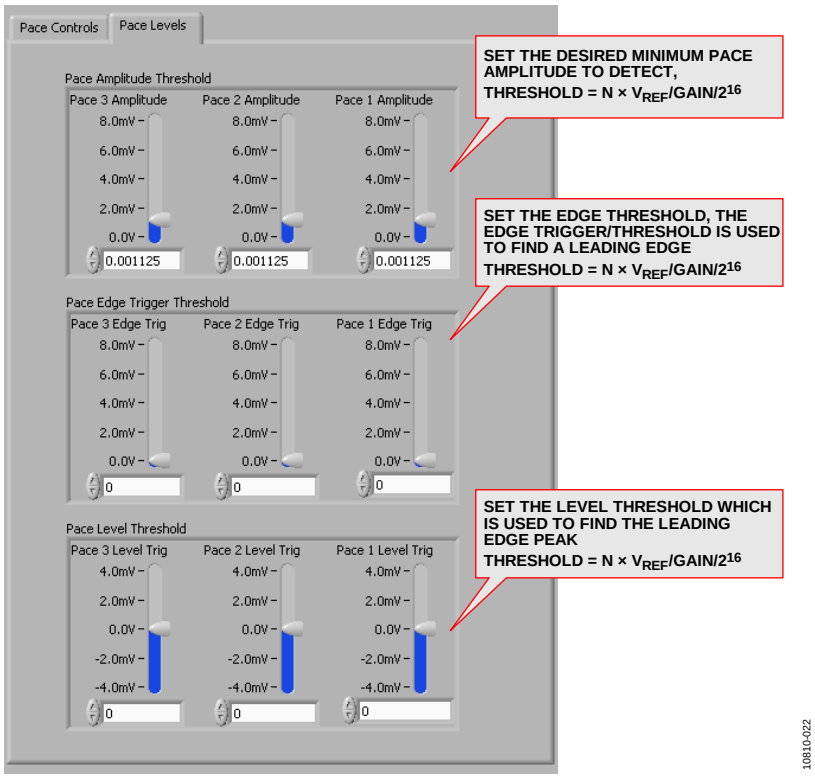

Figure 22. Pace Levels Tab

WRITE TO A FILE

A **Write to File** tab allows storage of a data capture over a period of time. Select either raw (date read back and provided in decimal format), voltages (software calculates the corresponding voltage of each lead/electrode), or parsed (where parsed breaks out the header word and the remaining words are provided in decimal format) file for offline processing.

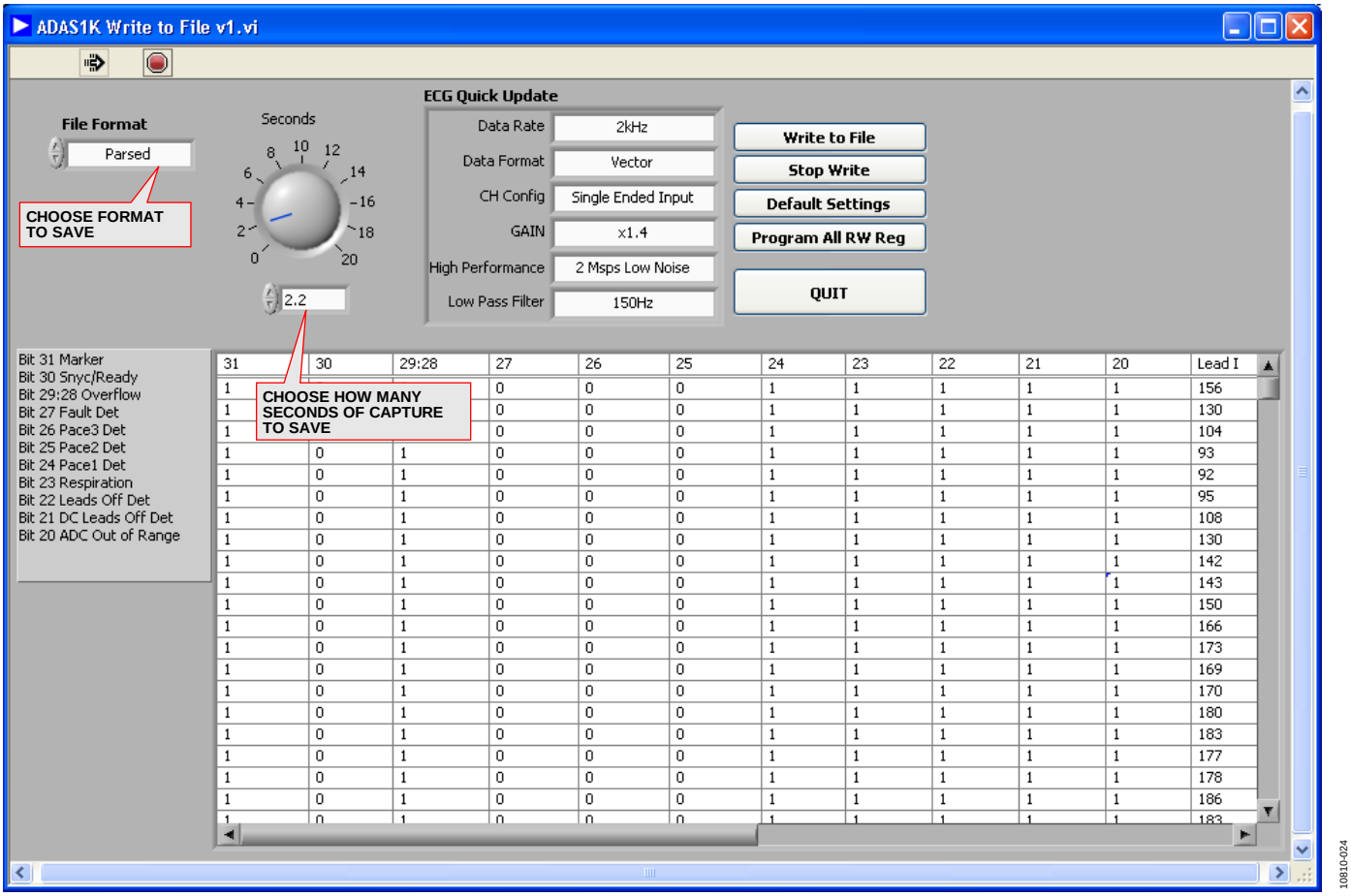

Figure 23. Write to File Tab

1. When you click **Write to File,** a **Choose file to write** window opens (see Figure 24).
2. Select the appropriate location and name the file with the name of your choice. Using an extension like .dat or .xls works well here. The data is formatted tab delimited as shown in Figure 24. This data can be copied into Microsoft® Excel® and processed offline.

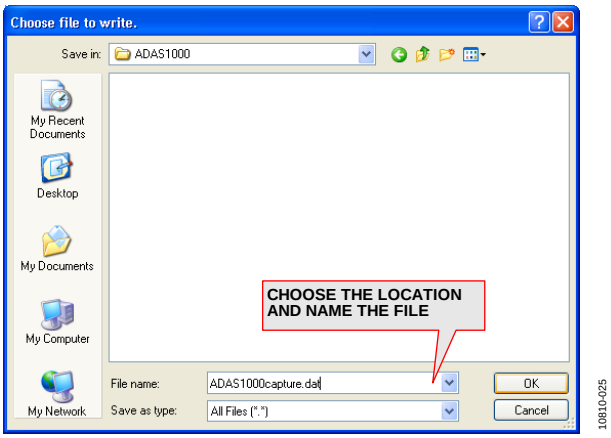

Figure 24. Choose the Location and Name the File

RAW

When you save raw data, this saves data in decimal codes. The information from the header file is shown first (details about lead status, pace, fault, overflow, and so on) followed by the lead words and any other words that are enabled in the Frame Control register (pace, respiration, lead off, and so on).

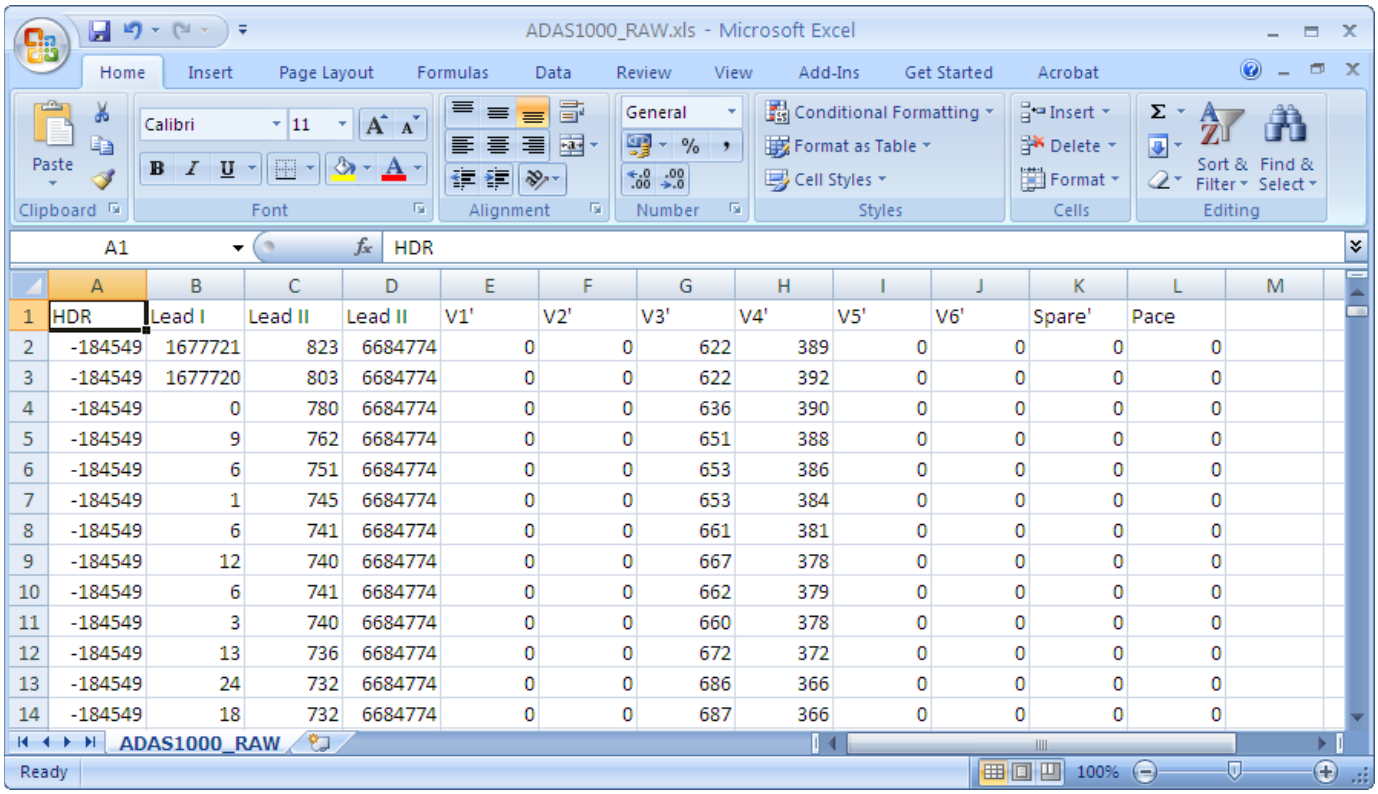

HDR	Lead I	Lead II	Lead II	V1'	V2'	V3'	V4'	V5'	V6'	Spare'	Pace
-184549	1677721	823	6684774	0	0	622	389	0	0	0	0
-184549	1677720	803	6684774	0	0	622	392	0	0	0	0
-184549	0	780	6684774	0	0	636	390	0	0	0	0
-184549	9	762	6684774	0	0	651	388	0	0	0	0
-184549	6	751	6684774	0	0	653	386	0	0	0	0
-184549	1	745	6684774	0	0	653	384	0	0	0	0
-184549	6	741	6684774	0	0	661	381	0	0	0	0
-184549	12	740	6684774	0	0	667	378	0	0	0	0
-184549	6	741	6684774	0	0	662	379	0	0	0	0
-184549	3	740	6684774	0	0	660	378	0	0	0	0
-184549	13	736	6684774	0	0	672	372	0	0	0	0
-184549	24	732	6684774	0	0	686	366	0	0	0	0
-184549	18	732	6684774	0	0	687	366	0	0	0	0

10810-026

Figure 25. Data Stored in File When Saved as RAW Data

Parsed

Saving data as parsed saves the ECG data in decimal codes. The information from the header file is shown first (details about lead status, pace, fault, overflow, and so on) and parsed out into each individual bit. This is followed by the lead/electrode words and any other words that are enabled in the Frame Control register (pace, respiration, lead off, and so on).

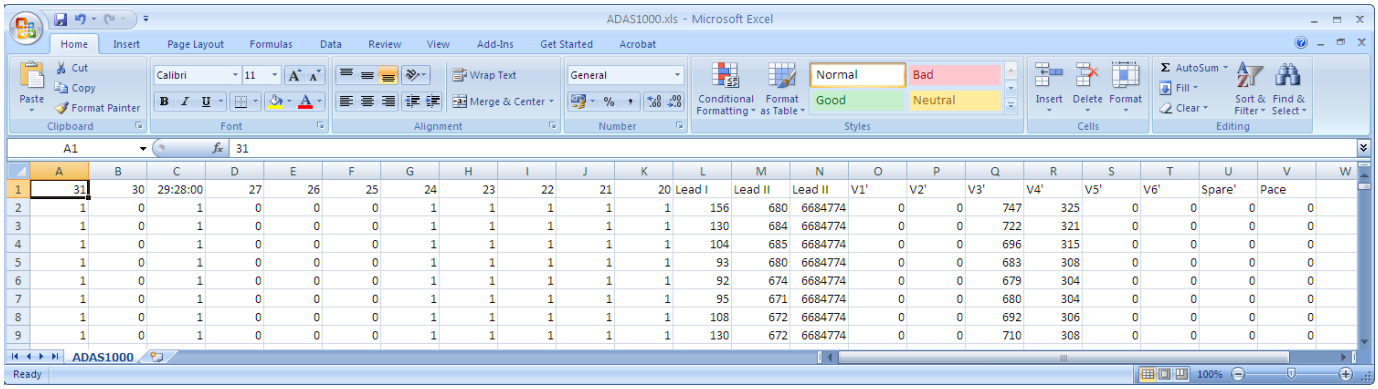

31	30	29:28:00	27	26	25	24	23	22	21	20	Lead I	Lead II	Lead II	V1'	V2'	V3'	V4'	V5'	V6'	Spare'	Pace
1	0	1	0	0	0	1	1	1	1	1	156	680	6684774	0	0	747	325	0	0	0	0
1	0	1	0	0	0	1	1	1	1	1	130	684	6684774	0	0	722	321	0	0	0	0
1	0	1	0	0	0	1	1	1	1	1	104	685	6684774	0	0	696	315	0	0	0	0
1	0	1	0	0	0	1	1	1	1	1	93	680	6684774	0	0	683	308	0	0	0	0
1	0	1	0	0	0	1	1	1	1	1	92	674	6684774	0	0	679	304	0	0	0	0
1	0	1	0	0	0	1	1	1	1	1	95	671	6684774	0	0	680	304	0	0	0	0
1	0	1	0	0	0	1	1	1	1	1	108	672	6684774	0	0	692	306	0	0	0	0
1	0	1	0	0	0	1	1	1	1	1	130	672	6684774	0	0	710	308	0	0	0	0

10810-027

Figure 26. Data Stored in File When Saved as Parsed Data

Voltage

Voltage processes the electrode data and provides the equivalent voltage level of each electrode. The header and other words within the frame are stripped out of this data capture.

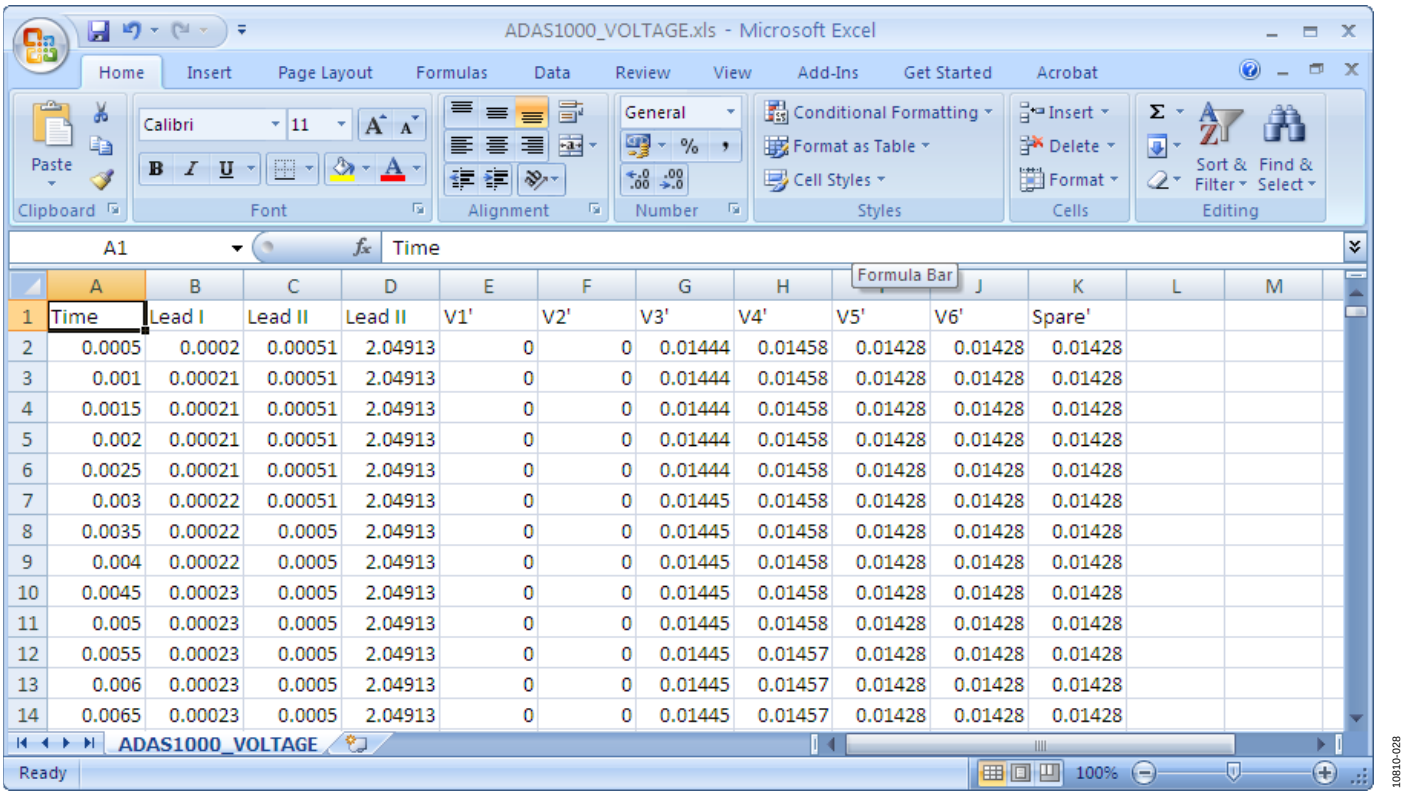

	A	B	C	D	E	F	G	H	I	J	K	L	M
1	Time	Lead I	Lead II	Lead II	V1'	V2'	V3'	V4'	V5'	V6'	Spare'		
2	0.0005	0.0002	0.00051	2.04913	0	0	0.01444	0.01458	0.01428	0.01428	0.01428		
3	0.001	0.00021	0.00051	2.04913	0	0	0.01444	0.01458	0.01428	0.01428	0.01428		
4	0.0015	0.00021	0.00051	2.04913	0	0	0.01444	0.01458	0.01428	0.01428	0.01428		
5	0.002	0.00021	0.00051	2.04913	0	0	0.01444	0.01458	0.01428	0.01428	0.01428		
6	0.0025	0.00021	0.00051	2.04913	0	0	0.01444	0.01458	0.01428	0.01428	0.01428		
7	0.003	0.00022	0.00051	2.04913	0	0	0.01445	0.01458	0.01428	0.01428	0.01428		
8	0.0035	0.00022	0.0005	2.04913	0	0	0.01445	0.01458	0.01428	0.01428	0.01428		
9	0.004	0.00022	0.0005	2.04913	0	0	0.01445	0.01458	0.01428	0.01428	0.01428		
10	0.0045	0.00023	0.0005	2.04913	0	0	0.01445	0.01458	0.01428	0.01428	0.01428		
11	0.005	0.00023	0.0005	2.04913	0	0	0.01445	0.01458	0.01428	0.01428	0.01428		
12	0.0055	0.00023	0.0005	2.04913	0	0	0.01445	0.01457	0.01428	0.01428	0.01428		
13	0.006	0.00023	0.0005	2.04913	0	0	0.01445	0.01457	0.01428	0.01428	0.01428		
14	0.0065	0.00023	0.0005	2.04913	0	0	0.01445	0.01457	0.01428	0.01428	0.01428		

Figure 27. Data Stored in File When Saved as Voltage

TEST TONES

The ADAS1000 has built-in test tones that can put out a 10 Hz or 150 Hz 1 mV sinewave, in addition to a 1 mV calibration pulse.

1. Configure the ADAS1000 for electrode mode in the ECGCTL register (see Figure 15) to be able to see these signals correctly. If the ADAS1000 is configured for vector/lead mode, then the test tone signals are subtracted from each other. Also, in the CMREFCTL register, none of the electrodes should be configured to contribute to the common-mode signal.
2. Use the **Test Tone** tab to configure this data.

A 10 Hz sine wave is shown in Figure 28. Applying an offset of 2 mV helps to enable viewing.

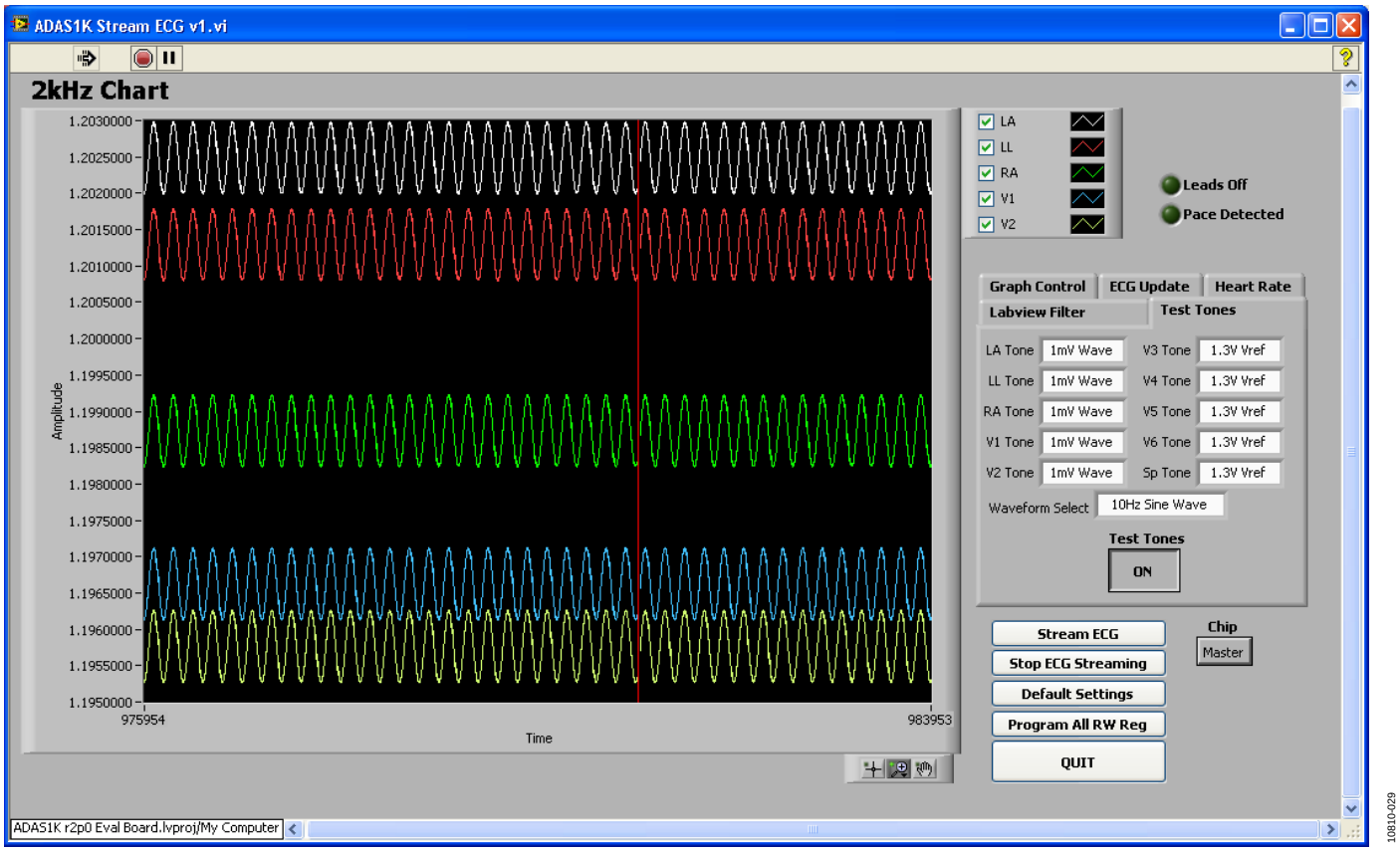

Figure 28. Viewing the Internal 10 Hz Sine Wave Test Tone Applied to the Master Device ECG Channels

Figure 29 shows the test tone signal programmed with a 1 Hz square wave (with an offset of 3 mV to enable viewing). Again, electrode mode is needed for correct viewing, and none of the electrodes should be configured to contribute to the common-mode signal.

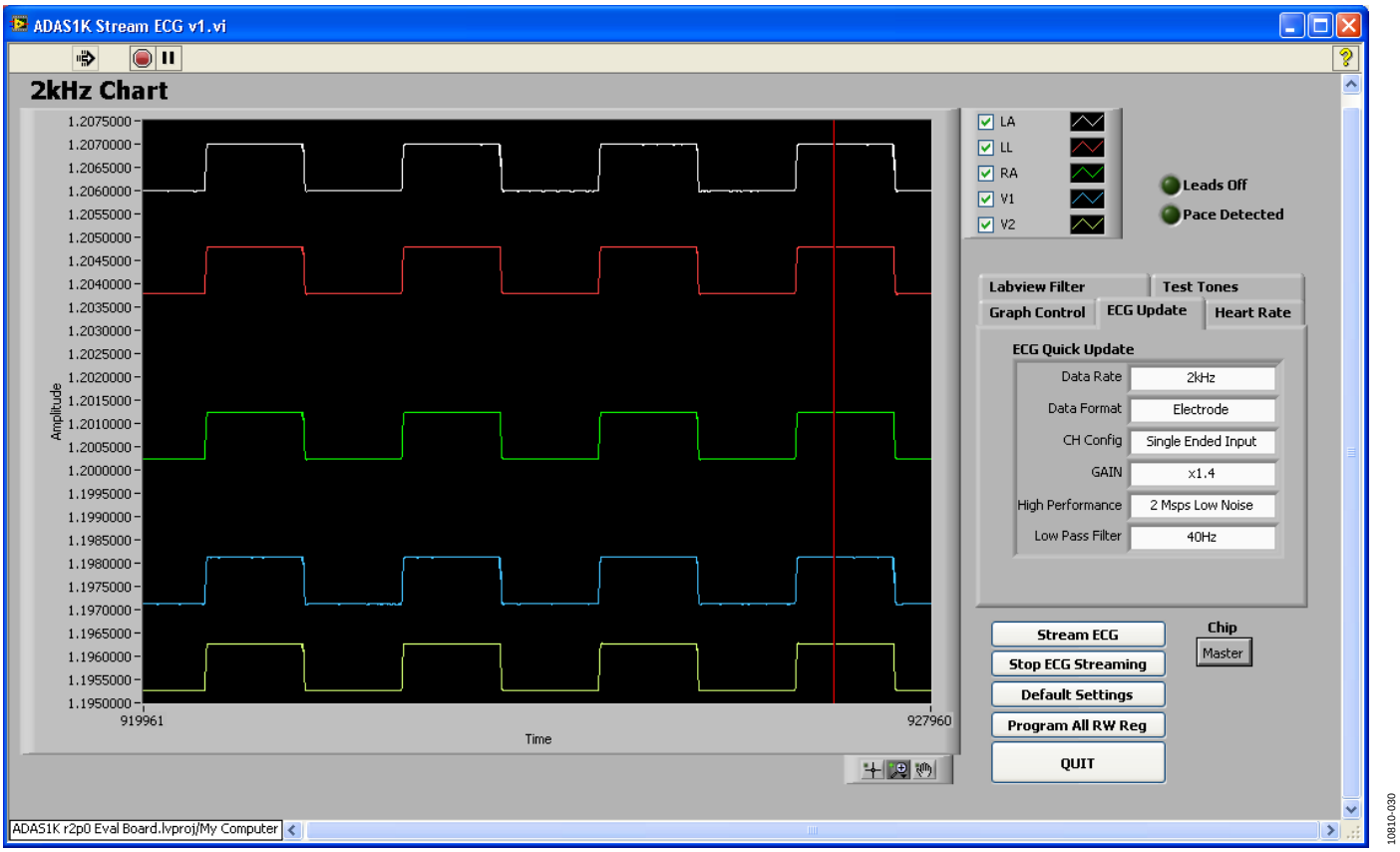

Figure 29. Viewing the Internal 1 Hz Square Wave Test Tone Applied to the Master Device ECG Channels

COMMON-MODEL LEVEL/WILSON CENTRAL TERMINAL

Common-Mode Level/Wilson Central Terminal

The ADAS1000 allows flexible configuration of the common-mode signal, in that any of the electrodes can be used to generate the common-mode level VCM. When no electrodes are selected to contribute to the common mode level, then the VCM = VCM_REF which is the internal 1.3 V level.

- The Wilson central terminal of (RA + LA + LL)/3 can be configured here also as shown in Figure 30.
- The VCM can be brought out to the CM_OUT pin.
- The VCM level used internally can come from the internal VCM level (as arranged by the selection of electrodes). Alternatively, it can be sourced externally from the CM_IN pin (for example, if using multiple ADAS1000 devices and wishing to share the VCM across them–the master device could provide the CM_OUT to the slave devices CM_IN pin, so they are all referenced to the same common-mode level).

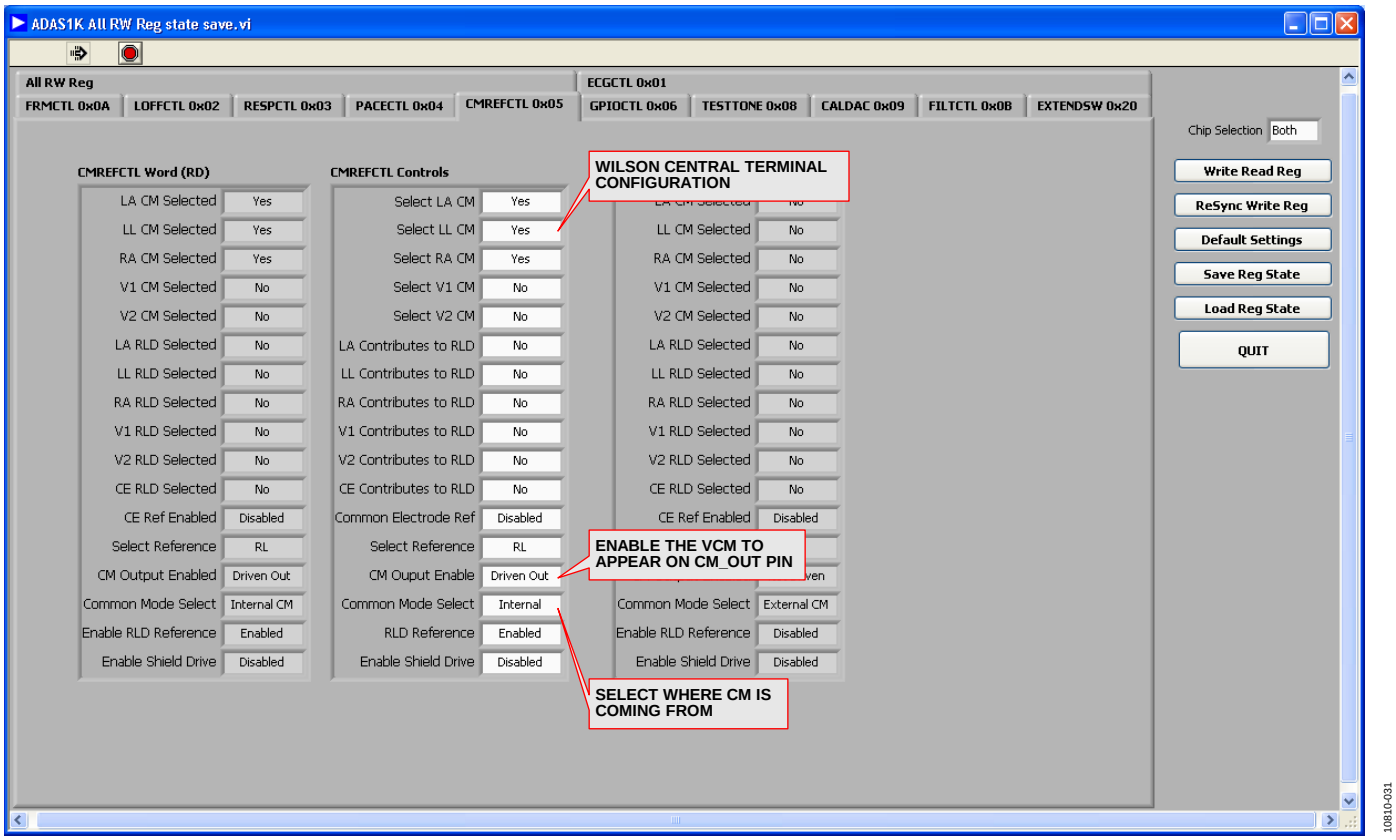

Figure 30. CMREFCTL 0x05 Table

DETAILED DESCRIPTION

OVERVIEW OF SCHEMATICS

Refer to Figure 47 for schematics related to the master device. The master device provides ECG electrodes RA, LA, LL, V1, V2, and RLD (see Figure 46) while the slave device services ECG electrodes V3, V4, V5, V6, and a spare channel.

ECG Protection

The ADAS1000 device has standard ESD cells on board. In addition, SP724 SCR/diode protection arrays are used on the ECG input paths; however, they are not provided for defib protection purposes.

Optional Component Space on ECG path

Optional component space is provided for user-supplied cable and filter modelling in addition to pull-down resistors to RLD. Note that these limit the detection of dc leads of function because, if used, any off electrode would then be sitting at the RLD level and, thus, may no longer be detectable by the dc lead off circuit, particular at low current levels).

Right Leg Drive

The right leg drive amplifier or reference amplifier is used as part of a feedback loop to force the patient's common-mode voltage close to the ADAS1000 series internal 1.3 V reference level (VCM_REF). This centers all the electrode inputs relative to the input span, providing maximum input dynamic range. It also helps to reject noise and interference from external sources such as fluorescent lights or other patient-connected instruments, and absorbs the dc or ac lead-off currents injected on the ECG electrodes. The right leg reference signal may also be redirected onto any of the other electrodes (in absence of right leg electrode connection). Gold pin connectors are provided for replacement purposes. Nominal values used here are R_Z = 100 kΩ, C_Z = 2 nF, R_{FB} = 3.9 MΩ, and R_{IN} = 39 kΩ.

VREG EN

VREG_EN = 1 (LK9 open) allows the internal LDO supplies to power the DVDD and ADCVDD rails. If using the J5 connector to supply DVDD and ADCVDD rails directly to the part, VREG_EN = 0 (LK9 closed) disables the on-board regulators.

If using the J5 connector to supply DVDD and ADCVDD rails directly to the part, also remove LK17 and LK18.

PACE INTERFACE (OPTIONAL)

An optional pace interface is available via Connector J6. This is a master interface and provides fast 128 kHz ECG data for external digital pace algorithm purposes.

POWER

The ADP2503 buck-boost regulator is included to allow for battery powered operation from 3 × AA (4.5 V) batteries.

ADP151 LDOs provide the AVDD = 3.3 V and IOVDD =3.3 V rails required. IOVDD = 3.3 V as the SDP board interface expects 3.3 V input levels (see Figure 49).

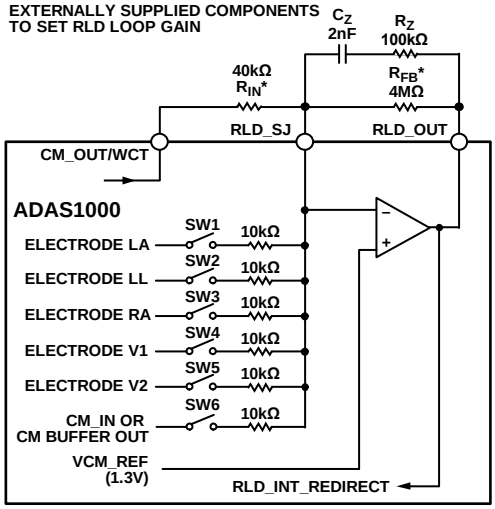

Figure 31. Right Leg Drive Configuration on Evaluation Board

FLEXIBLE RESPIRATION FEATURE ON MASTER ADAS1000

Respiration measurement is made in the master device. The respiration path is equipped with much flexibility for evaluation purpose. Figure 32 and Figure 33 illustrate the different methods of respiration measurement via different paths.

The control of the respiration function is described in the ADAS1000 data sheet.

Internal Drive/Measure via the ECG Paths

The primary respiration method uses internal respiration drive and measure. In some applications, this will require no external components and uses the standard ECG electrodes. In the evaluation board, a number of links are used to allow a user to evaluate different respiration configurations. For this instance, LK1, LK2, LK3, LK4, and LK19 can be open.

1. Configure the RESPCTL register (0x3) as follows: RESPCAP = 0 (internal).
2. Choose a relevant lead for measurement (RESPSEL), drive frequency (RESPFREQ), measurement gain (RESPGAIN), and so on.

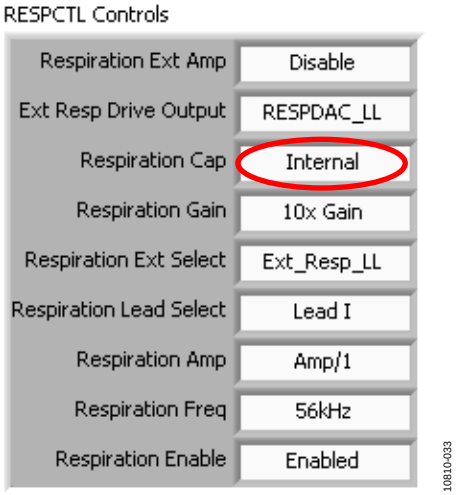

Figure 32. RESPCTL Controls–Respiration Cap

Configuring the Links

Note that the ADAS1000 respiration measurement is only made on one lead at any one time. However, the choice of lead is programmable: choose either LEAD I, LEAD II, or LEAD III.

For simplicity, Figure 33 allows the flexibility of programming the ADAS1000 respiration register to measure on all 3 leads (again, only 1 lead at any one time). This may not be the practice in end applications, therefore if a user is only interested in one particular lead during evaluation of the respiration function, adjust the links accordingly.

Note that Figure 33 shows RC components which may represent input filtering or cable model.

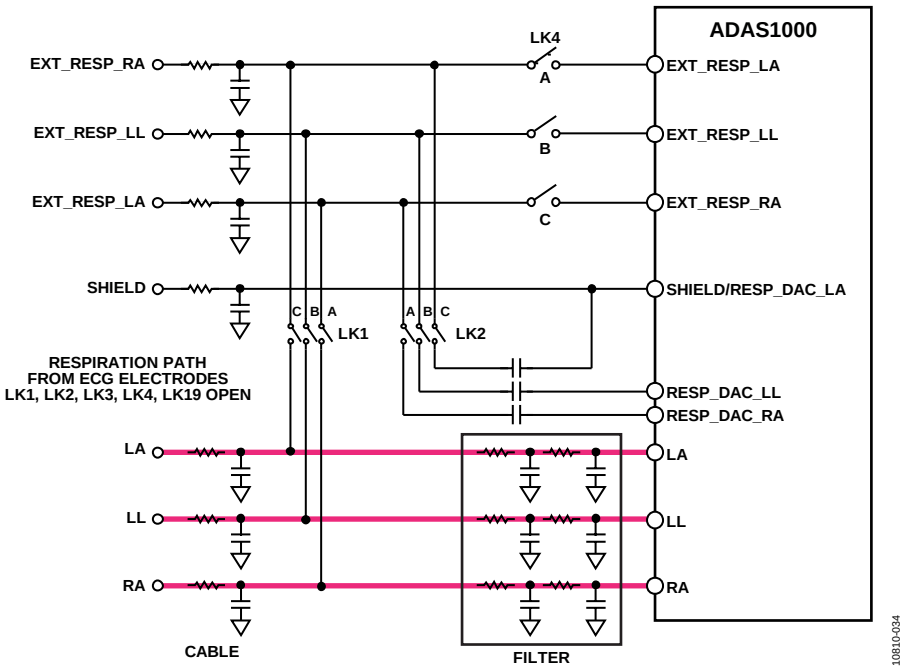

Figure 33. Respiration Drive Using Internal Capacitor, Respiration Measurement Using ECG Path

Internal Drive/Measure via the ECG/EXT_RESP Paths

This configuration allows the user to potentially bypass any ESIS filtering in the ECG path. Note that the input range of the EXT_RESP_XX pins must not be exceeded.

1. Configure the RESPCTL register (0x3) as follows:
   RESPCAP = 0 (internal capacitor),
   RESPSEL = 11 (EXT_RESP path selected).
2. Choose which path to measure on RESPSELEXT.
3. Choose the appropriate drive frequency (RESPFREQ), measurement gain (RESPGAIN), and so on.

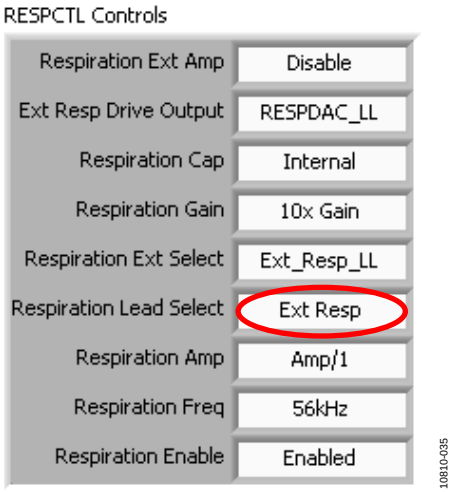

Figure 34. RESPCTL Controls–Respiration Lead Select

Configuring the Links

Note that the ADAS1000 respiration measurement is only made on one lead at any one time. In the ext_resp path, the EXT_RESP_RA is always enabled internally and the user has a choice of EXT_RESP_LA or EXT_RESP_LL giving options of LEAD 1 or LEAD III.

For simplicity, Figure 35 allows the flexibility of programming the ADAS1000 respiration register to measure on these 2 leads (again, only 1 lead at any one time). This may not be the practice in the end application, therefore if you are only interested in one particular lead during evaluation of the respiration function, adjust the links accordingly.

In this example, LK4 and LK1 would be inserted and LK2 would be open. Note that Figure 35 shows RC components which may represent input filtering or cable model.

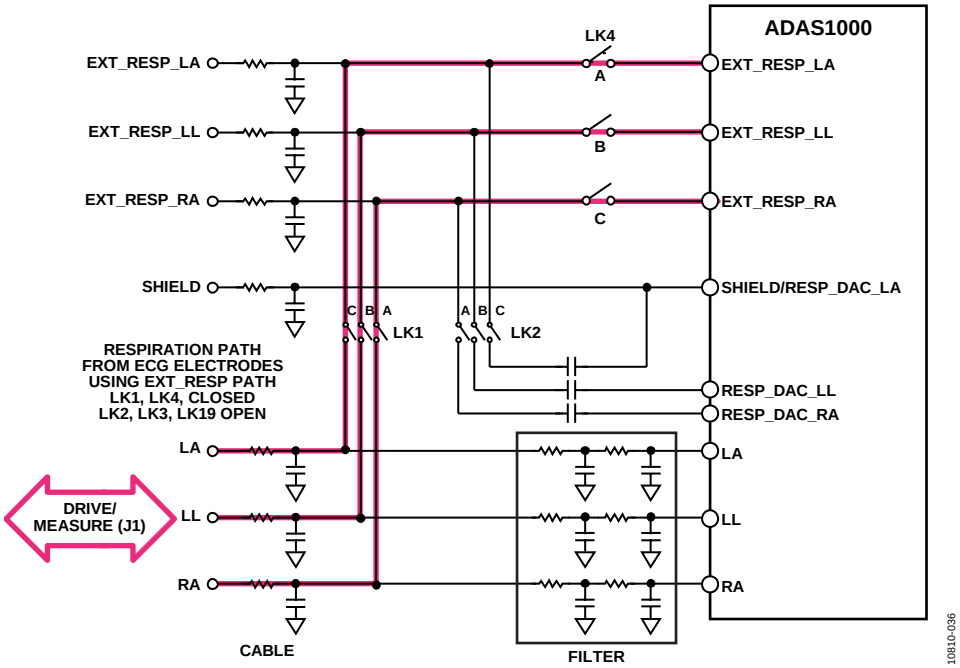

Figure 35. Respiration Drive Using Internal Capacitor, Respiration Measurement Using ECG Paths via the EXT_RESP Path

Internal Drive/Measure via the EXT_RESP Path

This configuration allows the user to measure directly from the respiration connector provided on the board (J8).

1. Configure the RESPCTL register (0x3) as follows:
   RESPCAP = 0 (internal capacitor),
   RESPSEL = 11 (EXT_RESP path selected).
2. Choose which path to measure on RESPSELEXT.
3. Choose the appropriate drive frequency (RESPFREQ), measurement gain (RESPGAIN), and so on.

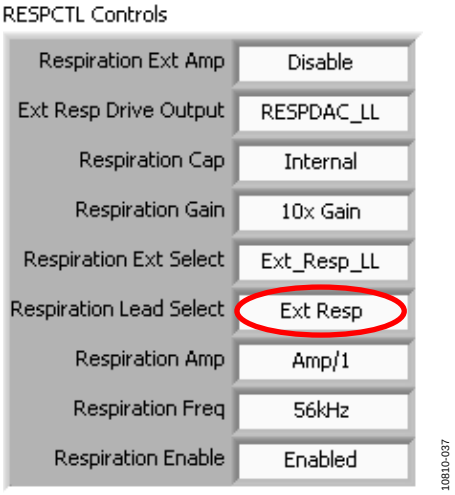

Figure 36. RESPCTL Controls–Respiration Lead Select

Configuring the Links

Note that the ADAS1000 respiration measurement is only made on one lead at any one time. In the ext_resp path, the EXT_RESP_RA is always enabled internally and the user has a choice of EXT_RESP_LA or EXT_RESP_LL giving options of LEAD 1 or LEAD III.

For simplicity, Figure 37 allows the flexibility of programming the ADAS1000 respiration register to measure on these 2 leads (again, only 1 lead at any one time). This may not be the practice in the end application, therefore if you are only interested in one particular lead during evaluation of the respiration function, adjust the links accordingly.

In this example, LK4 would be inserted and LK1 and LK2 would be open. Note that Figure 37 shows RC components which may represent input filtering or cable model.

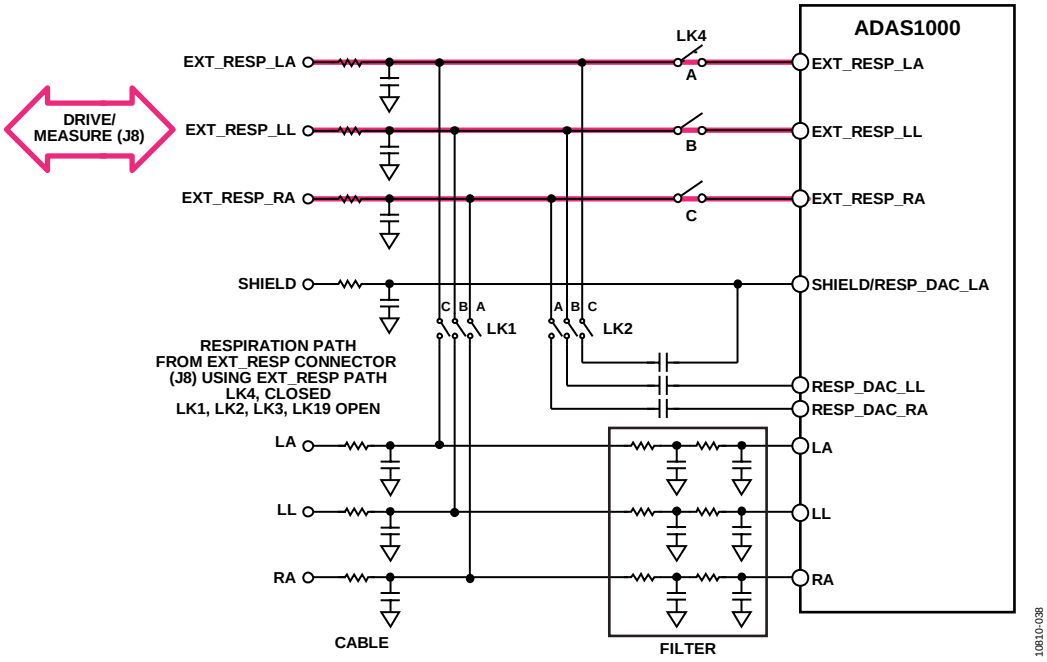

Figure 37. Respiration Drive Using Internal Capacitor, Respiration Measurement via EXT_RESP Path

External Drive/Measure via the ECG Path

This configuration allows the user to drive via external capacitors provided on the board and measure back through the ECG path. This mode requires external capacitors in the RESPDAC_XX paths. Note that when this mode is enabled, RESPDAC_RA is always enabled.

1. Configure the RESPCTL register (0x3) as follows:
   RESPOUT = 0/1 (0 = RESPDAC_LL, 1 = RESPDAC_LA),
   RESPCAP = 1 (external capacitor),
   RESPSEL = XX (Lead I, II, III).
2. Choose appropriate drive frequency (RESPFREQ), measurement gain (RESPGAIN), and so on.

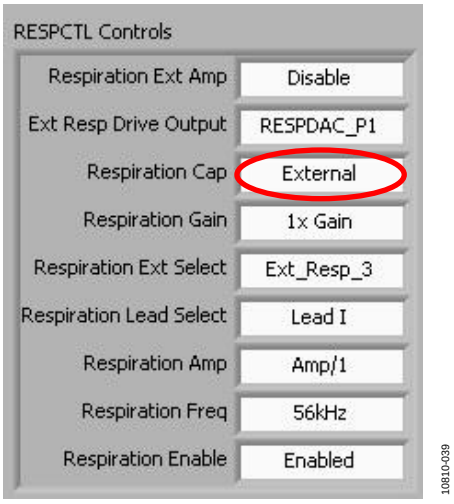

Figure 38. RESPCTL Controls–Respiration Cap

Configuring the Links

Note that the ADAS1000 respiration measurement is only made on one lead at any one time. However, the choice of lead is programmable, choose either LEAD I, LEAD II or LEAD III.

For simplicity, the drawing that follows allows the flexibility of programming the ADAS1000 respiration register to measure on all 3 leads (again, only 1 lead at any one time). This may not be the practice in the end application, therefore if you are only interested in one particular lead during evaluation of the respiration function, adjust the links accordingly.

In this example, LK4 would be open and LK1 and LK2 would be inserted.

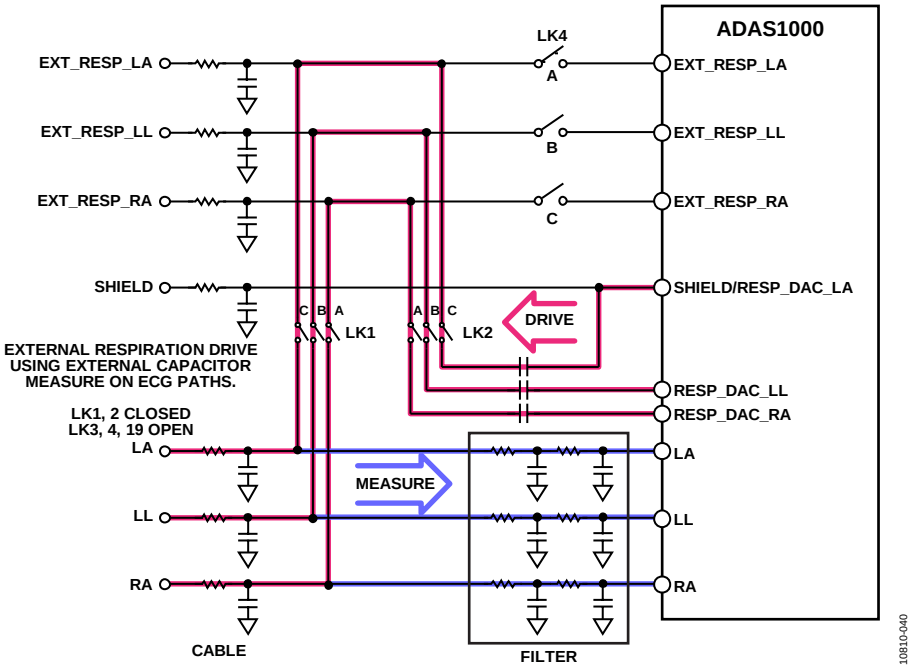

Figure 39. Respiration Drive Using External Capacitor, Respiration Measurement Using ECG Paths

External Drive/Measure via the EXT_RESP Path

This configuration allows the user to drive via external capacitors provided on the board and measure back through the EXT_RESP path. Note that when this mode is enabled, RESPDAC_RA is always enabled.

1. Configure the RESPCTL register (0x3) as follows:
   RESPOUT = 0/1
   (0 = RESPDAC_LL, 1 = RESPDAC_LA),
   RESPCAP = 1, (external capacitor),
   RESPSEL = 11 (external respiration path),
   RESPEXTSEL = 0/1
   (0 = EXT_RESP_LL, 1 = EXT_RESP_LA).
2. Choose the appropriate drive frequency (RESPFREQ), measurement gain (RESPGAIN), and so on.

Note that the selected RESPDAC_LL or RESPDAC_LA need to match the selected EXT_RESP_LL/LA selected when measuring on the external range. The example for register settings in Figure 41 shows RESPDAC_LA and EXT_RESP_LA selected, therefore LK2AC, LK4AC and LK1AC need to be inserted.

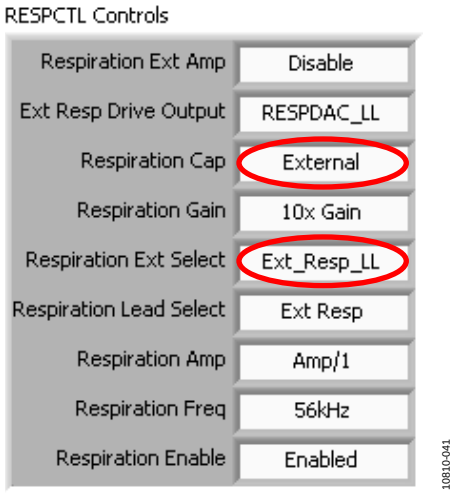

Figure 40. RESPCTL Controls–Respiration Cap and Respiration Lead Select

Configuring the Links

Note that the ADAS1000 respiration measurement is only made on one lead at any one time. In the ext_resp path, the EXT_RESP_RA is always enabled internally and a user has a choice of EXT_RESP_LA or EXT_RESP_LL giving options of LEAD 1 or LEAD III.

For simplicity, Figure 41 allows the flexibility of programming the ADAS1000 respiration register to measure on these 2 leads (again, only 1 lead at any one time). This may not be the practice in the end application, therefore if you are only interested in one particular lead during evaluation of the respiration function, adjust the links accordingly.

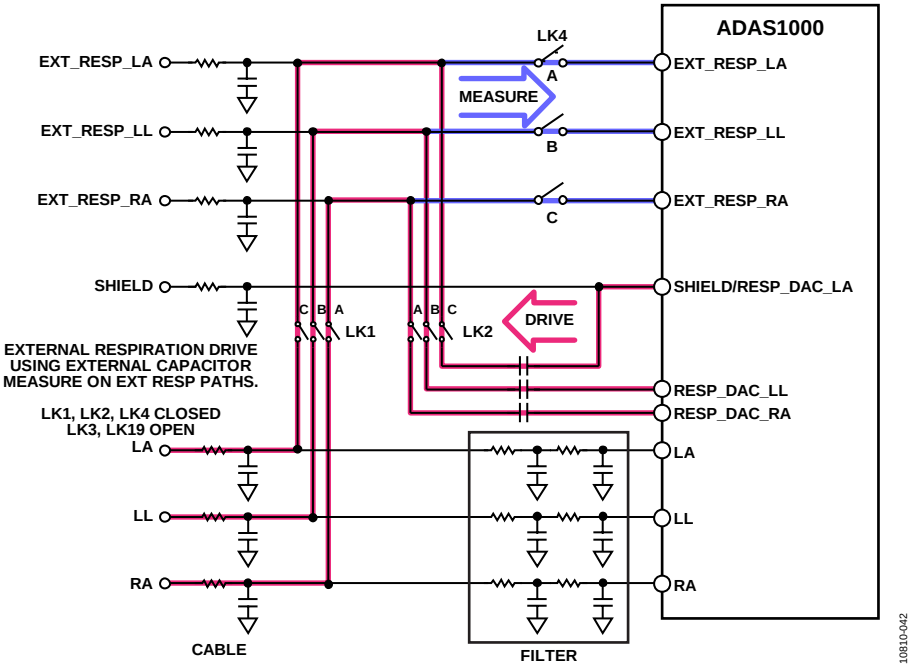

Figure 41. Respiration Drive Using External Capacitor, Respiration Measurement Using ECG Paths via the EXT_RESP Path

External Drive/Measure Using External Instrumentation Amplifier Stage Bypassing Internal ADAS1000 Respiration In-Amp

This configuration allows the user to drive via external capacitors provided on the board and measure back through the EXT_RESP path.

1. Configure the RESPCTL register (0x3) as follows:
   RESPAMP = 1 (enabled),
   RESPOUT = 1 (RESPDAC_P1),
   RESPCAP = 1 (external capacitor),
   RESPSEL = 11 (external respiration path),
   RESPEXTSEL = 1 (EXT_RESP3).
2. Choose the appropriate drive frequency (RESPFREQ) and measurement gain (RESPGAIN) as required.

For simplicity, the AD8226 instrumentation amplifier, operating from a 3.3 V supply rail, was used for this example. The noise performance of the AD8226 does not provide significant improvement over that of the ADAS1000, therefore any evaluations with this instrumentation amplifier may not provide appreciable respiration performance improvements.

An alternative instrumentation amplifier with lower noise performance or operated from a higher supply rail may achieve improved performance in a similar arrangement. Note that the RG value in the AD8226 circuit is open, setting a gain of 1 in this circuit. There is a resistor location (R79) available to adjust the gain as desired. The range of gain needs to be limited such that the input range <±0.7 V.

Note that this configuration of ADAS1000 respiration measurement is only made on one lead. (LEAD I).

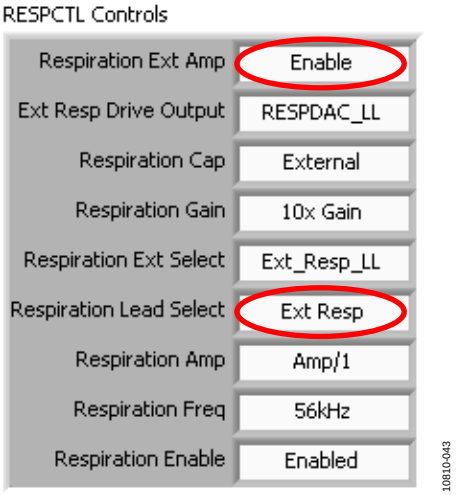

Figure 42. RESPCTL Controls–Respiration Ext Amp and Respiration Lead Select

Configuring the Links

In this example, LK1AC, LK2AC, LK15, and LK16 are all inserted; LK4 is open. LK3A and LK19A allow a user to choose a lead.

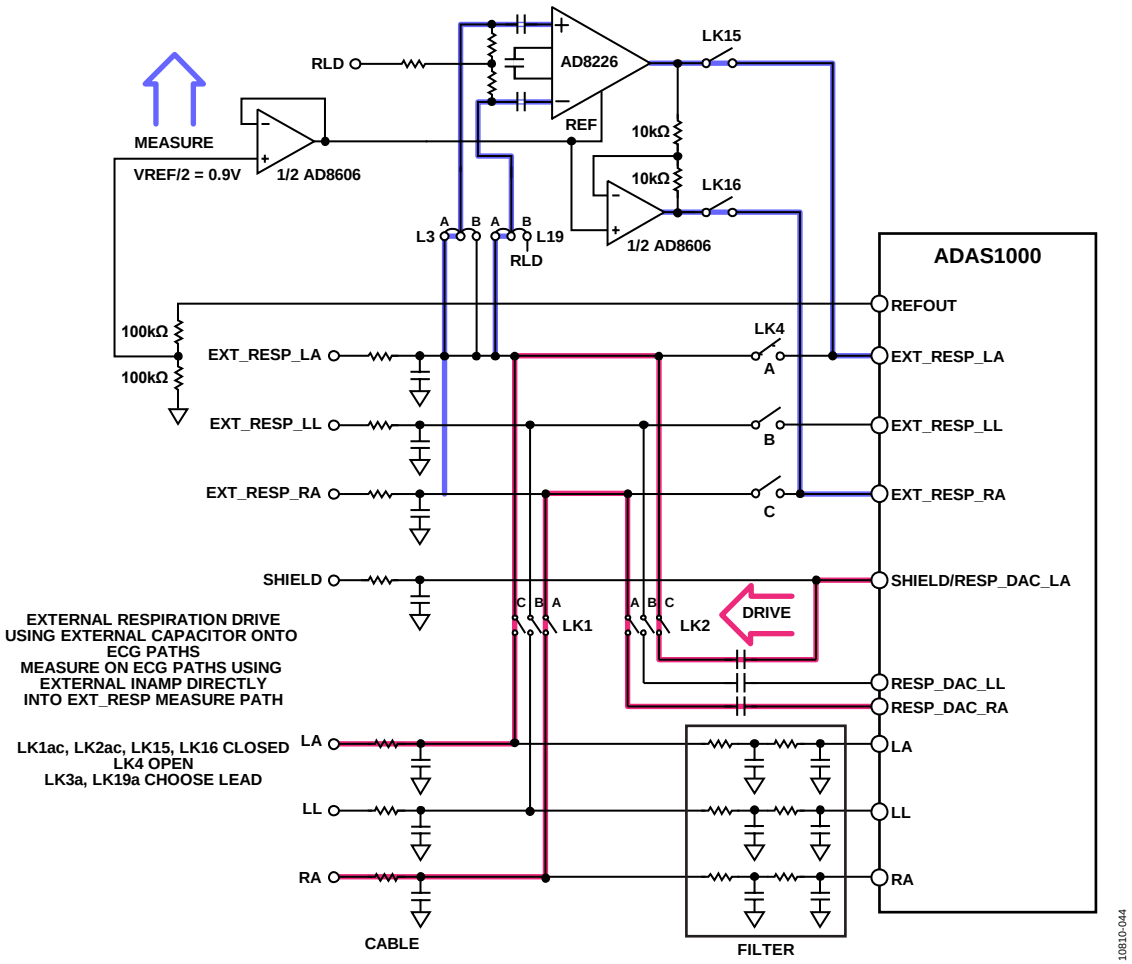

Figure 43. Respiration Drive Using External Capacitor, Respiration Measurement with External Amplifier

TROUBLESHOOTING

Hardware

The following procedure can help detect if there are issues connecting to the evaluation board or reading data.

1. Connect the ADAS1000 J2 to the SDP board connector.
2. Apply power to the ADAS1000 J9 connector, and then connect the USB cable to SDP J1. D10 should appear lit on the ADAS1000 board; LED1 should appear lit on the SDP board.
3. Confirm that the SDP board is seen in the **Device Manager** as shown in Figure 8.
4. Measure voltages at IOVDD and AVDD. Both these voltages should measure approximately 3.3 V.
5. Launch the software.
6. From the **Main Front Panel,** one should be able to read/write from the device and start streaming data. The ADAS1000 device powers up "powered down", therefore, a number of writes are needed to configure the device. This can be quickly done by clicking the **Default Setup** on the front panel. This action writes a number of codes to the device to power it on, thus enabling channels to read and to capture ECG data.
7. Confirm the contents of the registers by clicking on **Program All RW reg** from the front panel.
8. If the read/write is not operating correctly, power down the board and check that the ADAS1000 chip is correctly inserted and that theclamp is used to hold the ADAS1000 to the board is not overly tight.
9. If required, replace the ADAS1000 chip.

Software

The default folder for the install is
C:\Program Files\Analog DevicesADAS1000

This folder contains the files shown in Figure 44.

1. Confirm these files are present. If they are not present, then reinstall the software from the CD. A reboot may be required after the installation process.

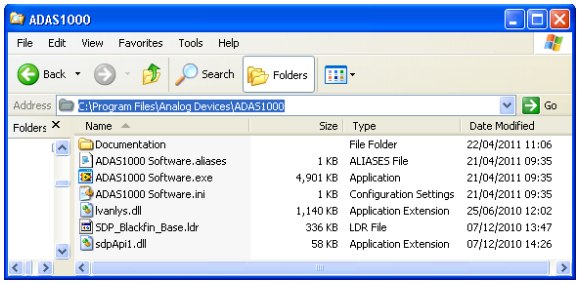

Figure 44. Files Installed in Analog Devices Folder

2. Always install the software prior to first connecting the evaluation board/SDP to the PC.

CLAMP

For some boards, the ADAS1000 devices are attached to the board using a plastic clamp with 4-corner screws for ease of replacement. These clamps press on the leads of the package making a good connection with the pads underneath. The screws should not be over tightened.

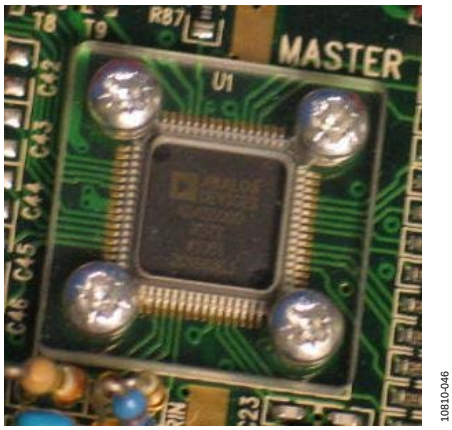

Figure 45. Unit Clamped to Board

EVALUATION BOARD SCHEMATICS

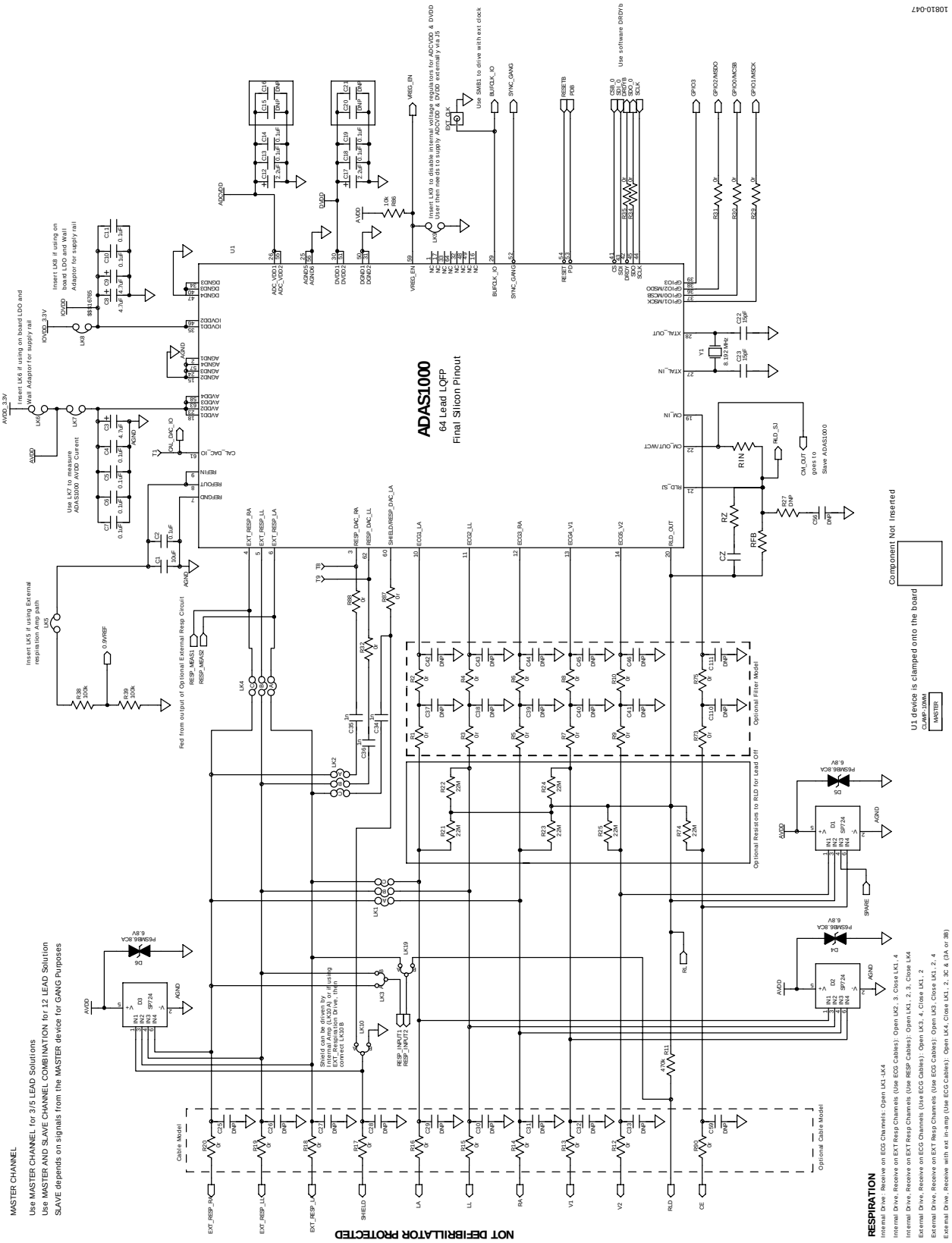

Figure 46. Master ADAS1000 (RA, LA, LL, V1, V2, and RLD)

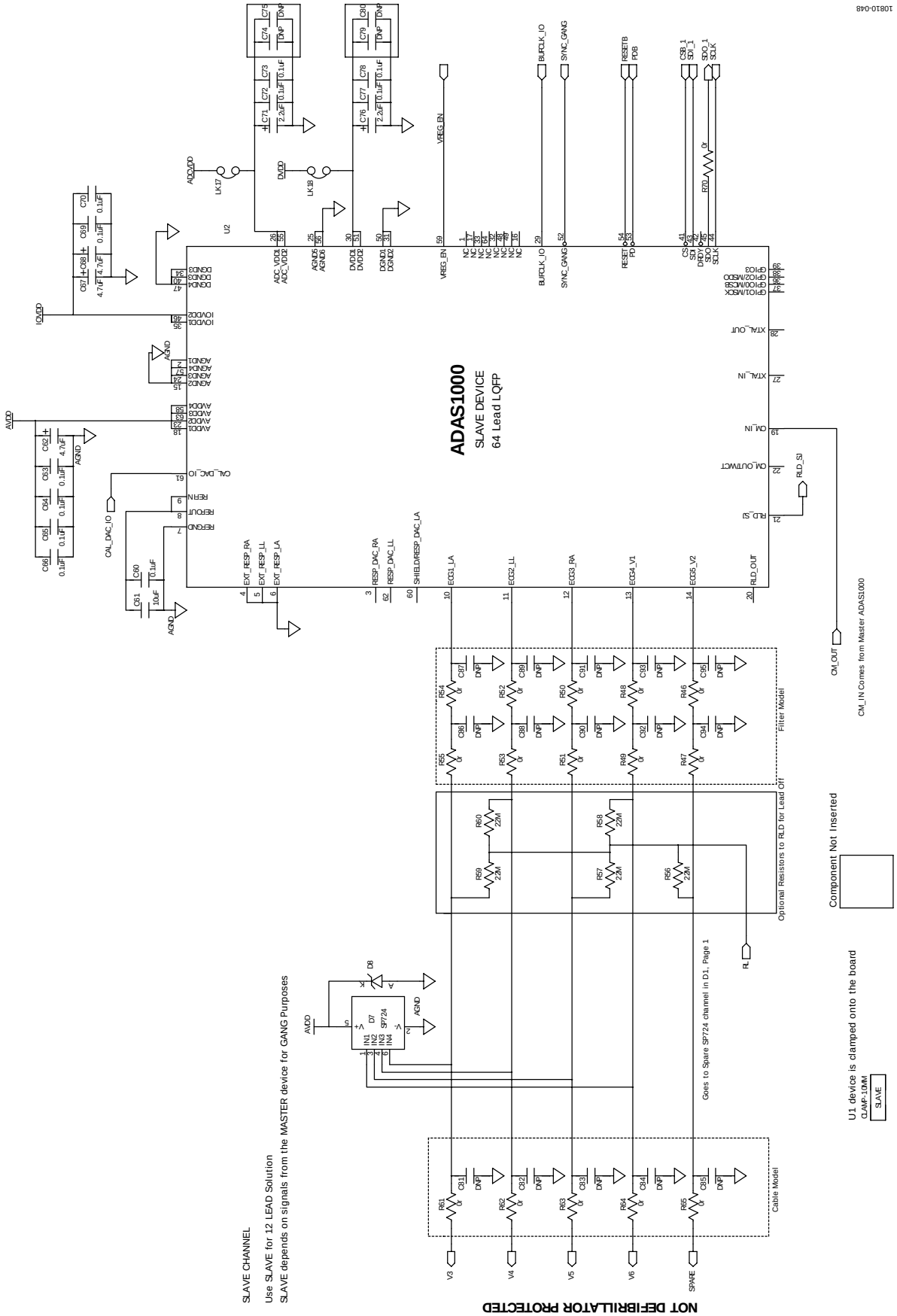

Figure 47. Slave ADAS1000 (V3, V4, V5, V6, and Spare)

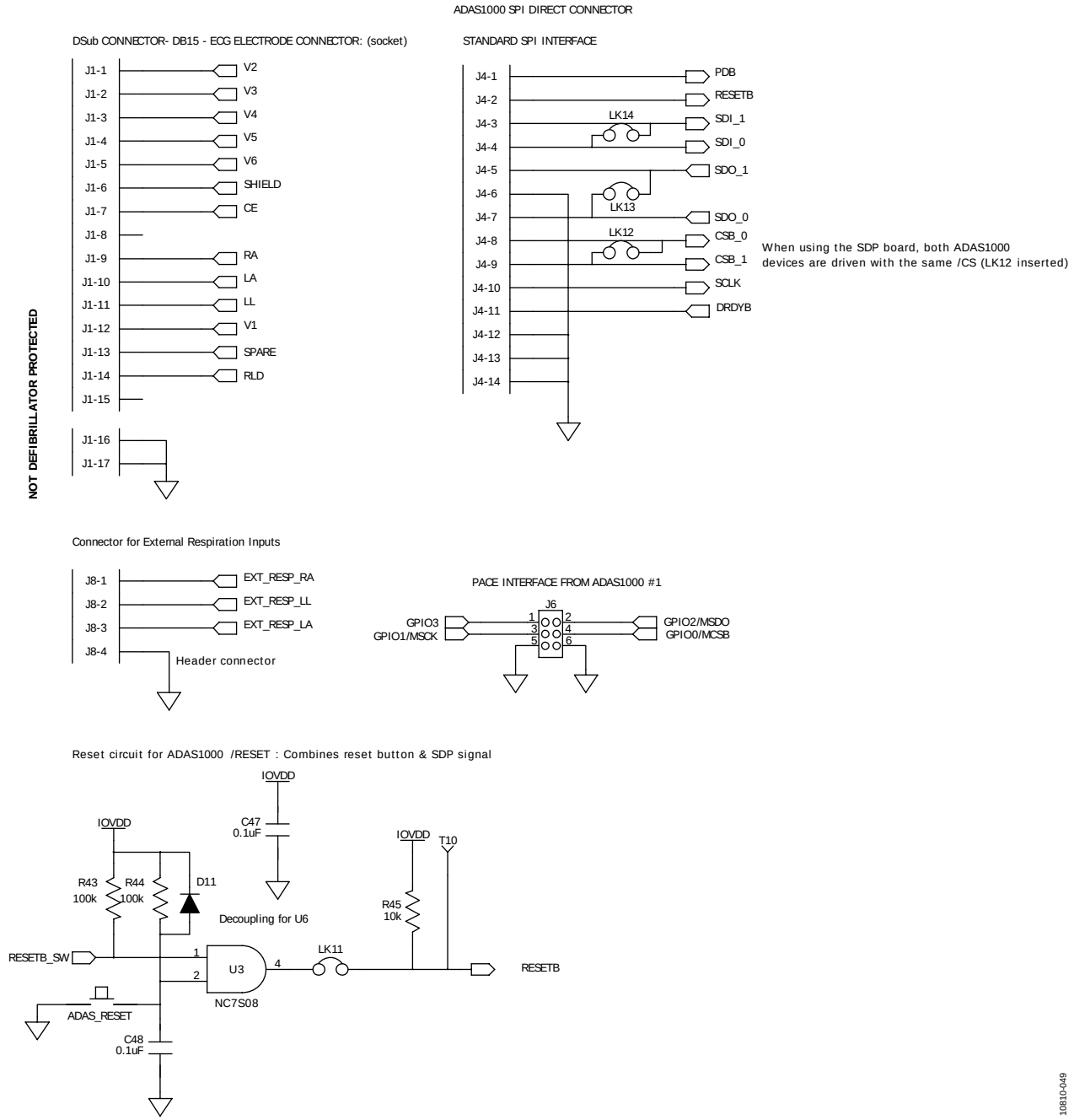

Figure 48. Connectors

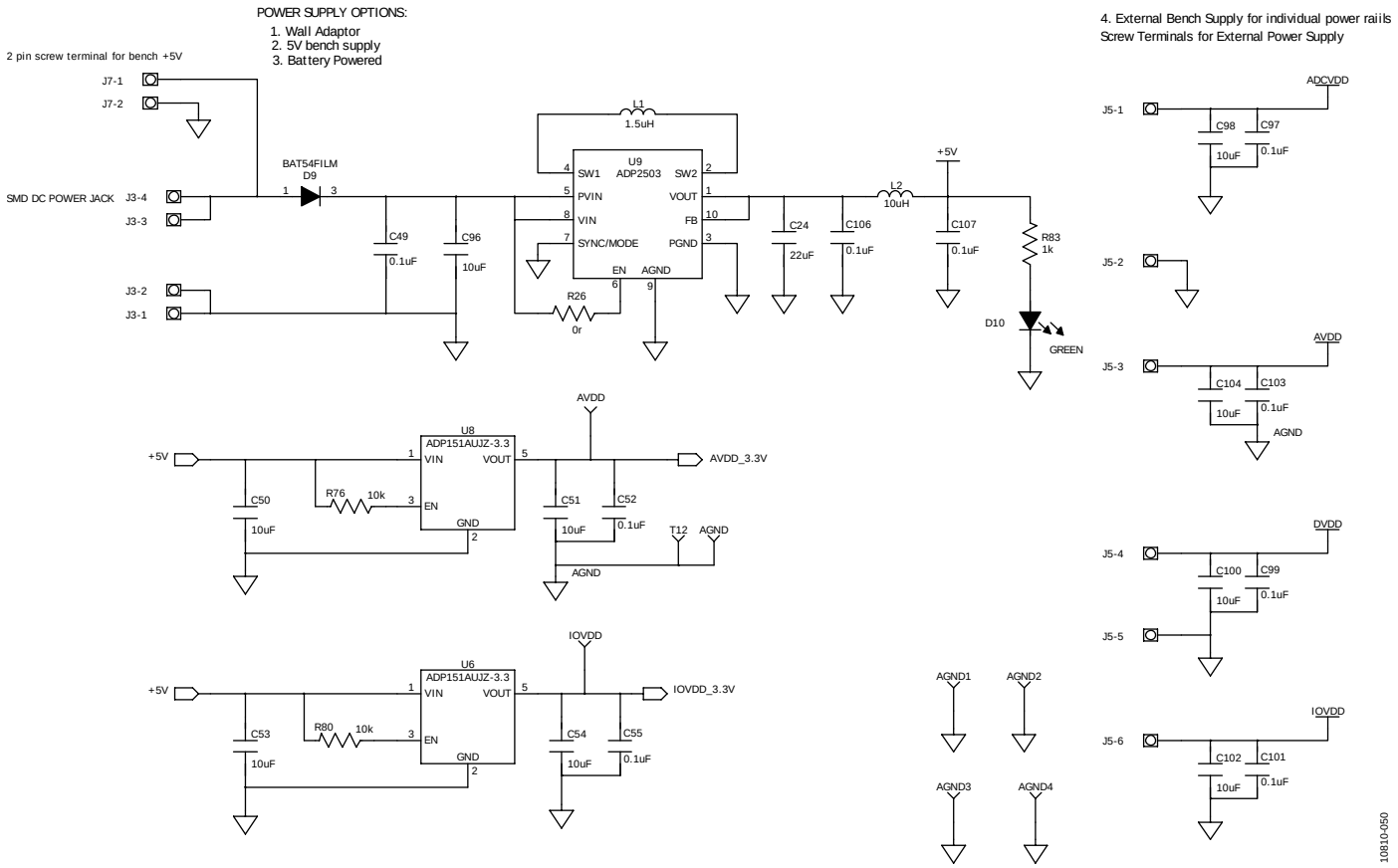

Figure 49. On-Board Power Options (LDOs On-Board to Supply Power to ADAS1000 and Other Component)

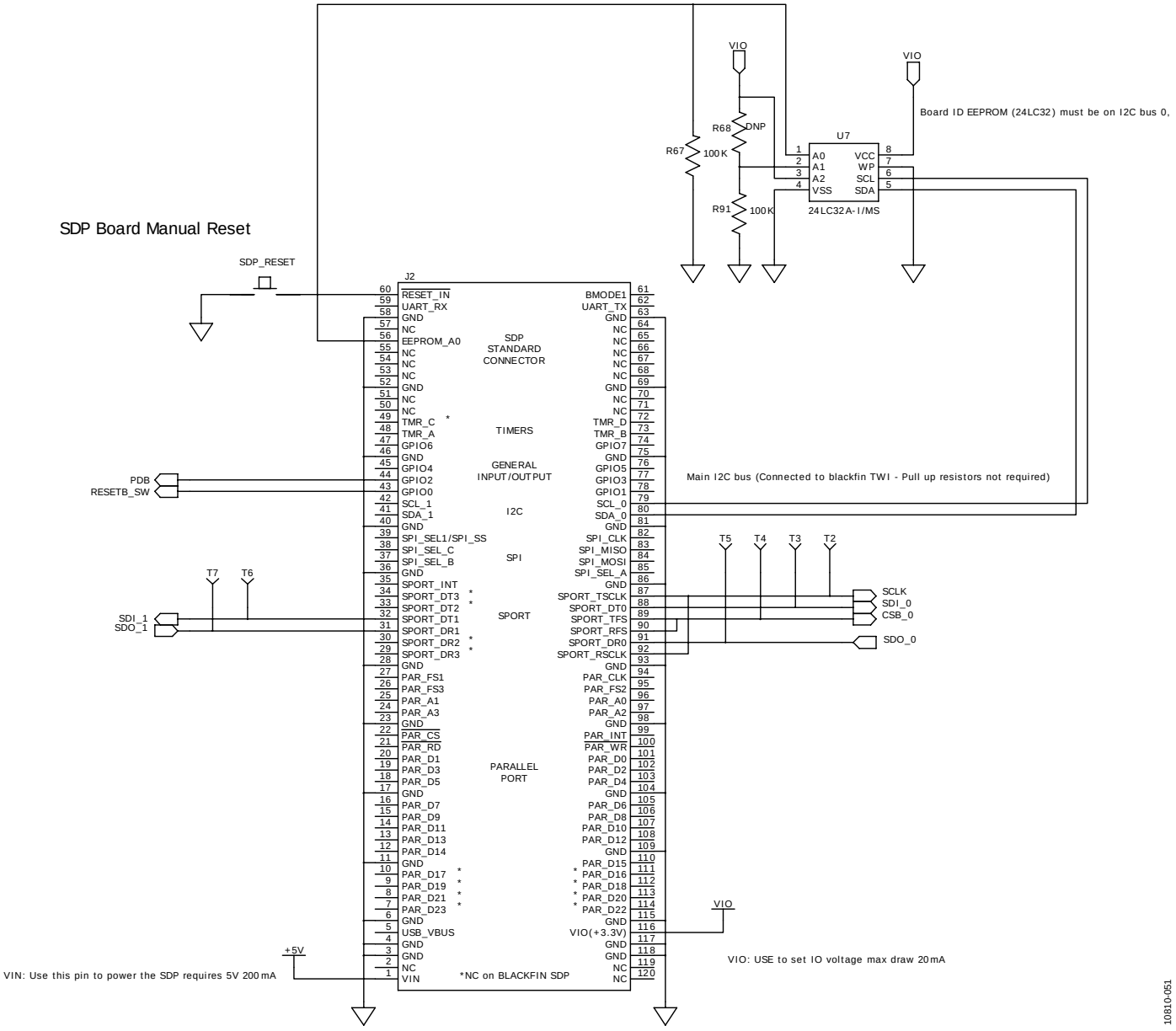

Figure 50. SDP Connector Schematic

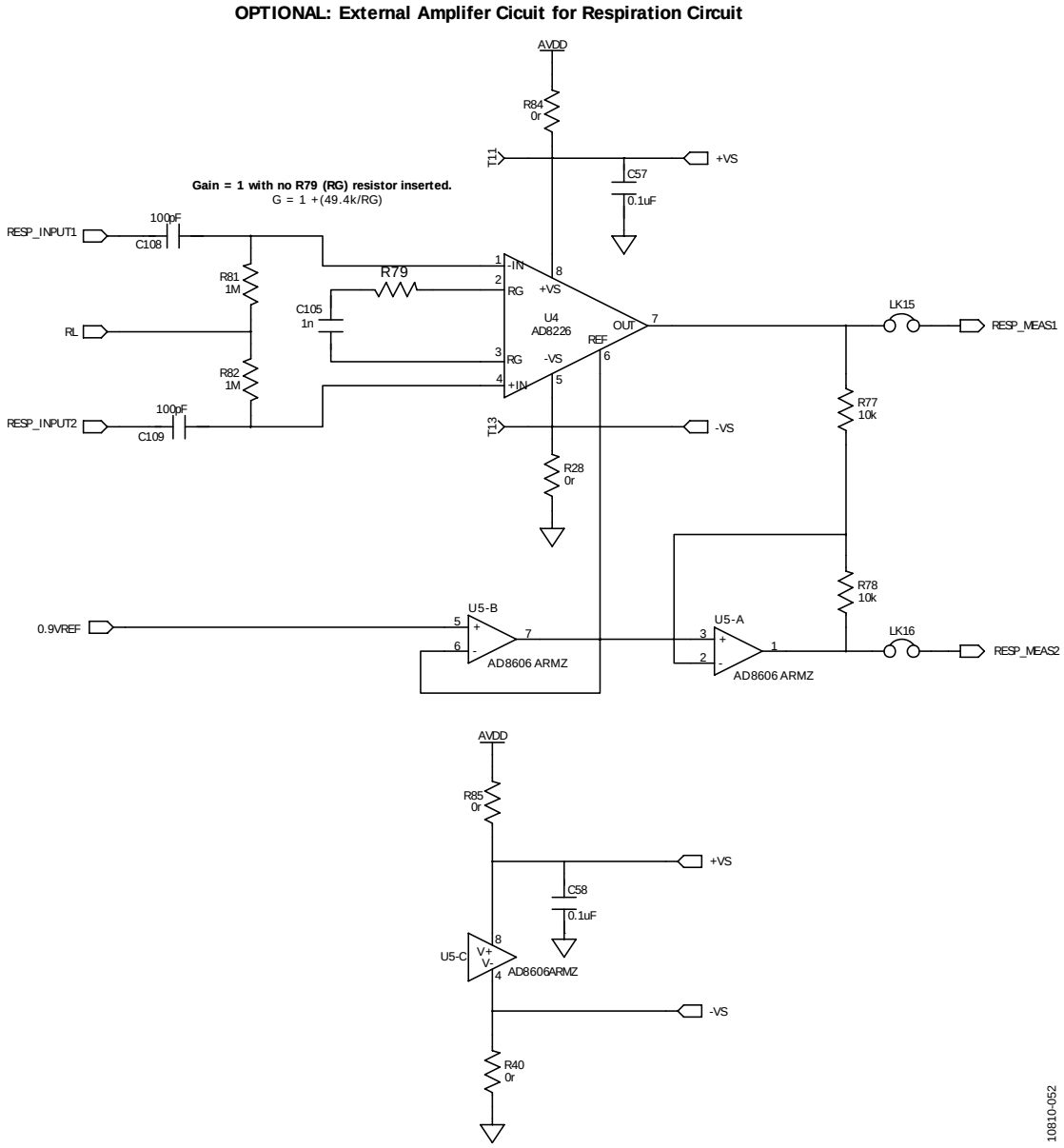

Figure 51. Optional Respiration Circuit for Increased Respiration Resolution Measurement

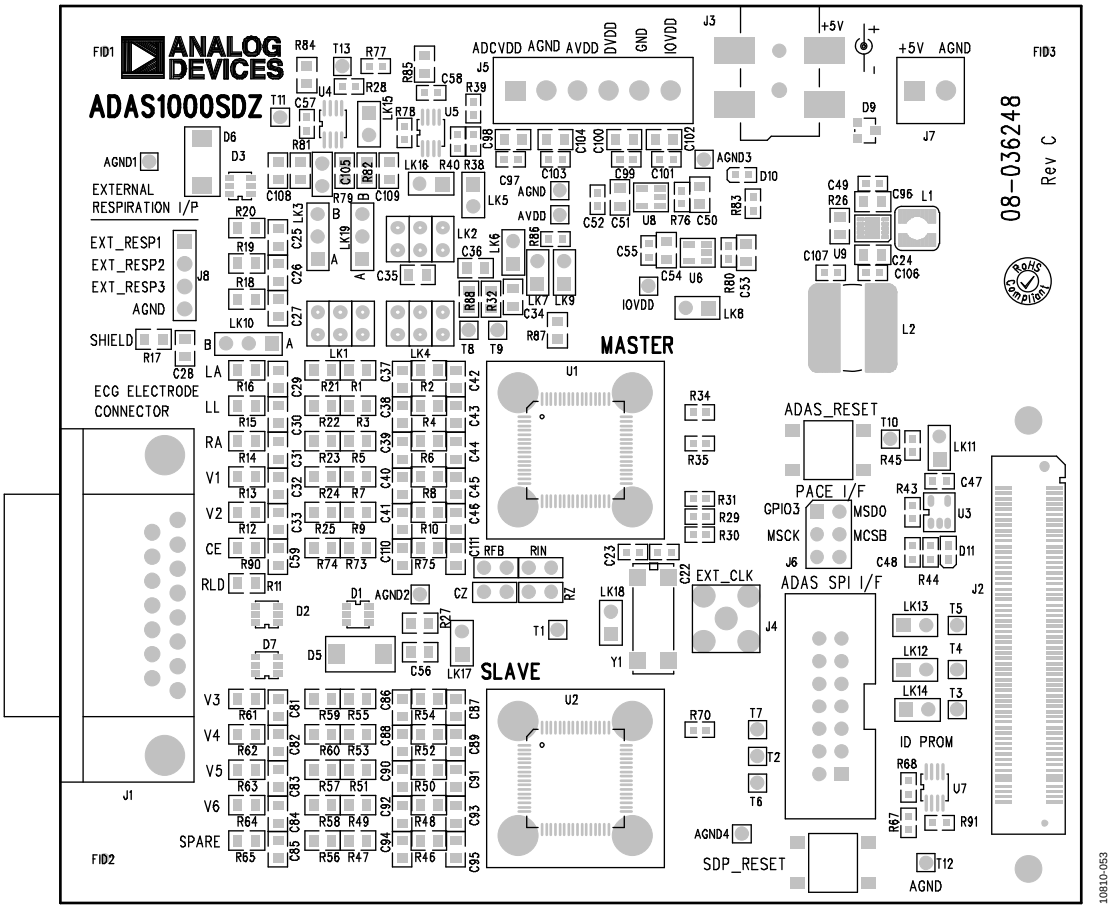

Figure 52. Component Placement–Silkscreen Top

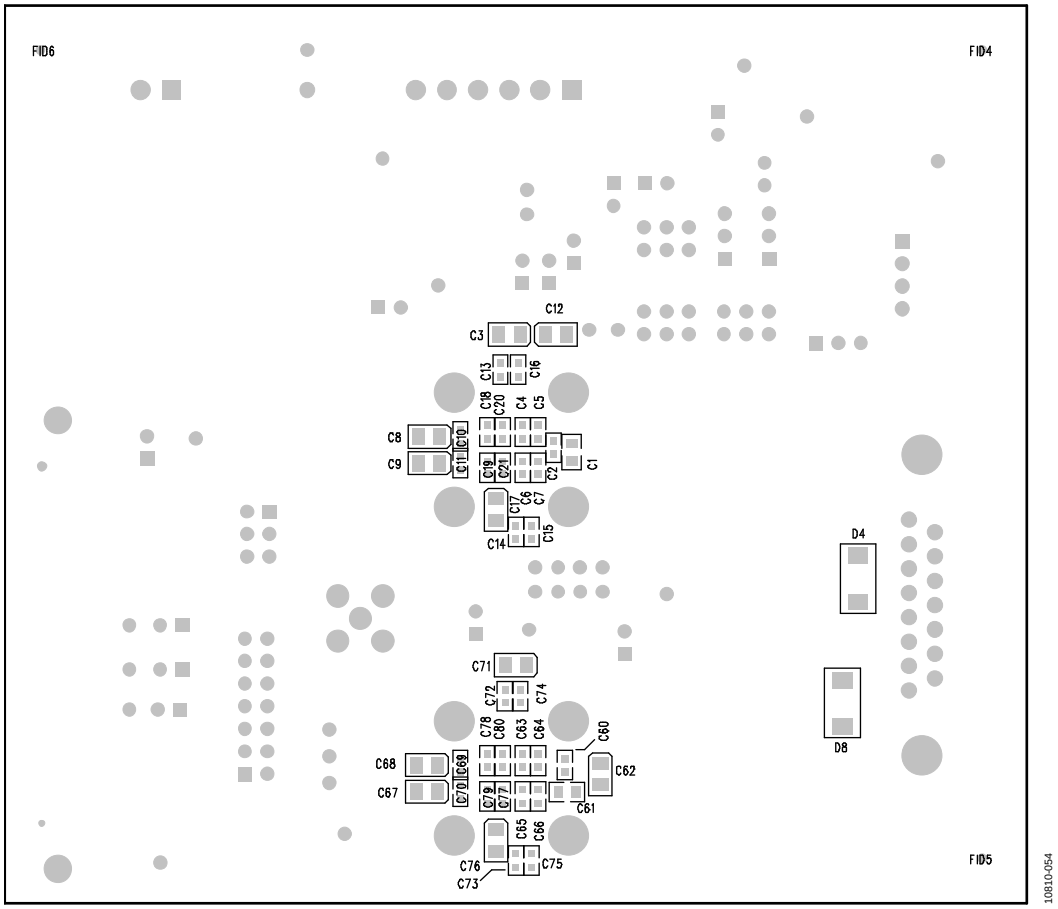

Figure 53. Component Placement–Bottom

NOTES

NOTES

ESD Caution

ESD (electrostatic discharge) sensitive device. Charged devices and circuit boards can discharge without detection. Although this product features patented or proprietary protection circuitry, damage may occur on devices subjected to high energy ESD. Therefore, proper ESD precautions should be taken to avoid performance degradation or loss of functionality.

Legal Terms and Conditions

By using the evaluation board discussed herein (together with any tools, components documentation or support materials, the "Evaluation Board"), you are agreeing to be bound by the terms and conditions set forth below ("Agreement") unless you have purchased the Evaluation Board, in which case the Analog Devices Standard Terms and Conditions of Sale shall govern. Do not use the Evaluation Board until you have read and agreed to the Agreement. Your use of the Evaluation Board shall signify your acceptance of the Agreement. This Agreement is made by and between you ("Customer") and Analog Devices, Inc. ("ADI"), with its principal place of business at One Technology Way, Norwood, MA 02062, USA. Subject to the terms and conditions of the Agreement, ADI hereby grants to Customer a free, limited, personal, temporary, non-exclusive, non-sublicensable, non-transferable license to use the Evaluation Board FOR EVALUATION PURPOSES ONLY. Customer understands and agrees that the Evaluation Board is provided for the sole and exclusive purpose referenced above, and agrees not to use the Evaluation Board for any other purpose. Furthermore, the license granted is expressly made subject to the following additional limitations: Customer shall not (i) rent, lease, display, sell, transfer, assign, sublicense, or distribute the Evaluation Board; and (ii) permit any Third Party to access the Evaluation Board. As used herein, the term "Third Party" includes any entity other than ADI, Customer, their employees, affiliates and in-house consultants. The Evaluation Board is NOT sold to Customer; all rights not expressly granted herein, including ownership of the Evaluation Board, are reserved by ADI. CONFIDENTIALITY. This Agreement and the Evaluation Board shall all be considered the confidential and proprietary information of ADI. Customer may not disclose or transfer any portion of the Evaluation Board to any other party for any reason. Upon discontinuation of use of the Evaluation Board or termination of this Agreement, Customer agrees to promptly return the Evaluation Board to ADI. ADDITIONAL RESTRICTIONS. Customer may not disassemble, decompile or reverse engineer chips on the Evaluation Board. Customer shall inform ADI of any occurred damages or any modifications or alterations it makes to the Evaluation Board, including but not limited to soldering or any other activity that affects the material content of the Evaluation Board. Modifications to the Evaluation Board must comply with applicable law, including but not limited to the RoHS Directive. TERMINATION. ADI may terminate this Agreement at any time upon giving written notice to Customer. Customer agrees to return to ADI the Evaluation Board at that time. LIMITATION OF LIABILITY. THE EVALUATION BOARD PROVIDED HEREUNDER IS PROVIDED "AS IS" AND ADI MAKES NO WARRANTIES OR REPRESENTATIONS OF ANY KIND WITH RESPECT TO IT. ADI SPECIFICALLY DISCLAIMS ANY REPRESENTATIONS, ENDORSEMENTS, GUARANTEES, OR WARRANTIES, EXPRESS OR IMPLIED, RELATED TO THE EVALUATION BOARD INCLUDING, BUT NOT LIMITED TO, THE IMPLIED WARRANTY OF MERCHANTABILITY, TITLE, FITNESS FOR A PARTICULAR PURPOSE OR NONINFRINGEMENT OF INTELLECTUAL PROPERTY RIGHTS. IN NO EVENT WILL ADI AND ITS LICENSORS BE LIABLE FOR ANY INCIDENTAL, SPECIAL, INDIRECT, OR CONSEQUENTIAL DAMAGES RESULTING FROM CUSTOMER'S POSSESSION OR USE OF THE EVALUATION BOARD, INCLUDING BUT NOT LIMITED TO LOST PROFITS, DELAY COSTS, LABOR COSTS OR LOSS OF GOODWILL. ADI'S TOTAL LIABILITY FROM ANY AND ALL CAUSES SHALL BE LIMITED TO THE AMOUNT OF ONE HUNDRED US DOLLARS ($100.00). EXPORT. Customer agrees that it will not directly or indirectly export the Evaluation Board to another country, and that it will comply with all applicable United States federal laws and regulations relating to exports. GOVERNING LAW. This Agreement shall be governed by and construed in accordance with the substantive laws of the Commonwealth of Massachusetts (excluding conflict of law rules). Any legal action regarding this Agreement will be heard in the state or federal courts having jurisdiction in Suffolk County, Massachusetts, and Customer hereby submits to the personal jurisdiction and venue of such courts. The United Nations Convention on Contracts for the International Sale of Goods shall not apply to this Agreement and is expressly disclaimed.

©2012–2014 Analog Devices, Inc. All rights reserved. Trademarks and registered trademarks are the property of their respective owners.

UG10810-0-3/14(A)

www.analog.com