FILE NO:

DESCRIPTION CONTROL			
REV	DRAW	DATE	ECN NO.
R1	R1	2012/4/23	

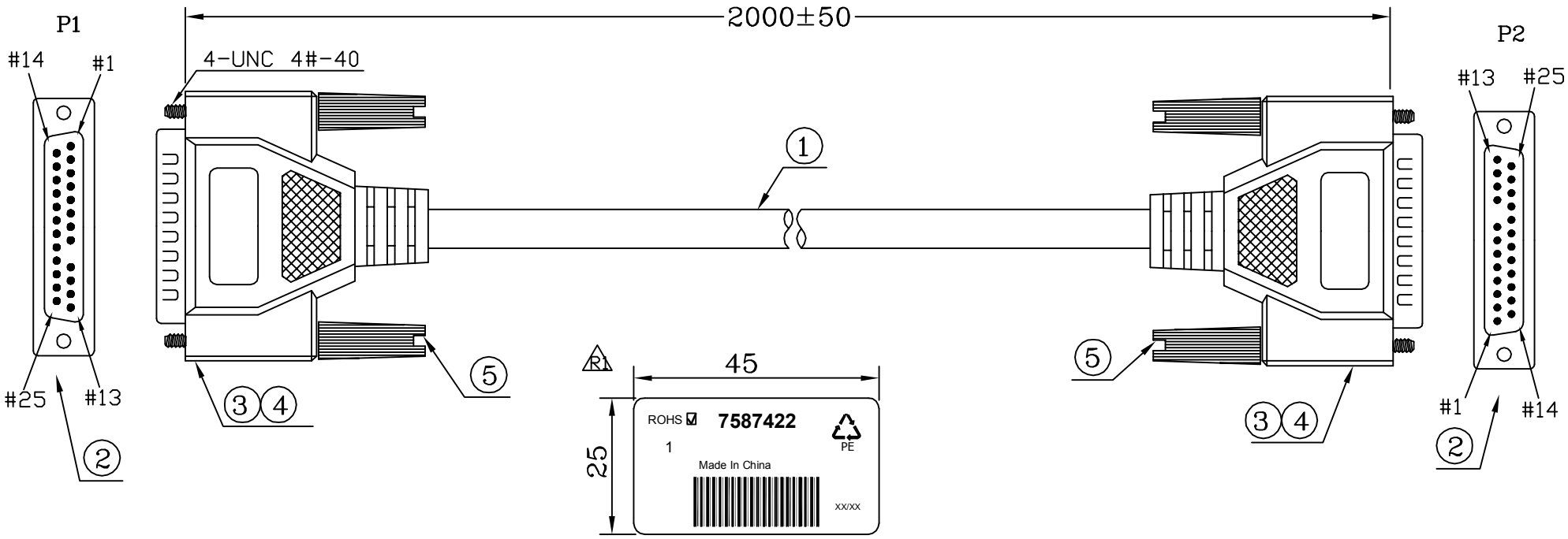

RoHS COMPLIANT

PIN ASSIGNMENT

P1	P2	P1	P2
1	1	14	14
2	2	15	15
3	3	16	16
4	4	17	17
5	5	18	18
6	6	19	19
7	7	20	20
8	8	21	21
9NC	NC9	22	22
10	10	23	23
11	11	24	24
12	12	25	25
13	13	S	S

NO	PART NO.	DESCRIPTION	QTY	UNIT
*		LABEL:45*25MM'	1	PCS
*	220030000361	TIE-A-GY22	120.0	MM
*	310000000012	CARTON:46*30*25CM	A/R	PCS
*	300010000001	PE BAG:30"*28"*0.08MM	A/R	PCS
*		PE BAG:6"*8"*0.06MM	1	PCS
5	240010100031	SRW-E31.5/GY22	4	PCS
4	120010000042	PVC-GY22/50	69	G
3	220020000001	PVC-IN	16.6	G
2		CDS-25P<BK><PIN9 PLUGGED>	2	PCS
1	120572592200 2X	28#-25C+D+A-GY22-ø7.0UL2464	2.0	M

OUTER MOLDING	IDB2515		
INNER MOLDING	IDB2514		

ITEM: 7587422 REV R1

DRAW,BY: 劉石壽 SCALE: NONE DATE: 2011-08-30

CHECK,BY: CUSTOMER:C331<RS> PAGE:1/1

APP,BY: CUSTOMER P/N: 7587422 R1

ALL DIMENSIONS IN