# I/O module - AXL DI 32/1 - 2688035

Please be informed that the data shown in this PDF Document is generated from our Online Catalog. Please find the complete data in the user's documentation. Our General Terms of Use for Downloads are valid
(http://download.phoenixcontact.com)

Axioline digital input module, 32 inputs, 24 V DC, single-wire connection method (including bus base module and connectors)

## Product description

The module is designed for use within an Axioline F station.
It is used to acquire digital signals.
The filter times of the inputs can be adjusted to increase noise immunity.
Filter times of 100 µs enable the user to implement a counter function with a maximum input frequency of 5 kHz in the application.

## Why buy this product

- 32 digital inputs according to EN 61131-2 type 1 and type 3
- 24 V DC, 2.4 mA
- Connection of sensors in single-wire technology
- Minimum update time of < 100 µs, bus synchronous
- Filter times can be adjusted in three increments: < 100 µs, 1000 µs or 3000 µs
- Maximum input frequency: 5 kHz
- Device rating plate stored
- Diagnostic and status indicators

## Key commercial data

| | |
|---|---|
| Packing unit | 1 pc |
| GTIN | 4 046356 501590 |
| Weight per Piece (excluding packing) | 214.9 g |
| Custom tariff number | 85389091 |
| Country of origin | Germany |

## Technical data

### Dimensions

| | |
|---|---|
| Width | 53.6 mm |
| Height | 126.1 mm |
| Depth | 54 mm |

# I/O module - AXL DI 32/1 - 2688035

## Technical data

### Dimensions

| | |
|---|---|
| Note on dimensions | The depth is valid when a TH 35-7.5 DIN rail is used (according to EN 60715). |

### Ambient conditions

| | |
|---|---|
| Ambient temperature (operation) | -25 °C ... 60 °C |
| Ambient temperature (storage/transport) | -40 °C ... 85 °C |
| Permissible humidity (operation) | 5 % ... 95 % (according to DIN EN 61131-2) |
| Permissible humidity (storage/transport) | 5 % ... 95 % (according to DIN EN 61131-2) |
| Air pressure (operation) | 70 kPa ... 106 kPa (up to 3000 m above sea level) |
| Air pressure (storage/transport) | 70 kPa ... 106 kPa (up to 3000 m above sea level) |
| Degree of protection | IP20 |

### General

| | |
|---|---|
| Weight | 167 g |
| Note on weight specifications | with plugs and bus base module |
| Mounting type | DIN rail |
| Protection class | III, IEC 61140, EN 61140, VDE 0140-1 |
| Test section | 5 V communications power (logic), 24 V supply (I/O) 500 V AC 50 Hz 1 min |
| | 5 V supply (logic)/functional earth ground 500 V AC 50 Hz 1 min |
| | 24 V supply (I/O) / functional earth ground 500 V AC 50 Hz 1 min |
| Conformance with EMC directives | Noise immunity test in accordance with EN 61000-6-2 Electrostatic discharge (ESD) EN 61000-4-2/IEC 61000-4-2 Criterion B; 6 kV contact discharge, 8 kV air discharge |
| | Noise immunity test in accordance with EN 61000-6-2 Electromagnetic fields EN 61000-4-3/IEC 61000-4-3 Criterion A; Field intensity: 10 V/m |
| | Noise immunity test in accordance with EN 61000-6-2 Fast transients (burst) EN 61000-4-4/IEC 61000-4-4 Criterion B, 2 kV |
| | Noise immunity test in accordance with EN 61000-6-2 Transient surge voltage (surge) EN 61000-4-5/IEC 61000-4-5 Criterion B; DC supply lines: ±0.5 kV/±0.5 kV (symmetrical/asymmetrical) |
| | Noise immunity test in accordance with EN 61000-6-2 Conducted interference EN 61000-4-6/IEC 61000-4-6 Criterion A; Test voltage 10 V |
| | Noise emission test according to EN 61000-6-3 Radio interference properties EN 55022 Class B |
| Mechanical tests | Vibration resistance in acc. with EN 60068-2-6/IEC 60068-2-6 5 g |
| | Shock in acc. with EN 60068-2-27/IEC 60068-2-27 25 g, 11 ms period, half-sine shock pulse |
| | Continuous shock according to EN 60068-2-27/IEC 60068-2-27 10 g |
| Diagnostics messages | I/O supply failure Yes |

### Interfaces

| | |
|---|---|
| Name | Axioline F local bus |
| Connection method | Bus base module |
| Transmission speed | 100 MBit/s |

### Axioline potentials

# I/O module - AXL DI 32/1 - 2688035

## Technical data

### Axioline potentials

| | |
|---|---|
| Communications power $U_{Bus}$ | 5 V DC (via bus base module) |
| Current consumption from $U_{bus}$ | max. 120 mA |
| Supply of digital input modules $U_I$ | 24 V DC |
| Current consumption from $U_I$ | max. 50 mA |

### Digital inputs

| | |
|---|---|
| Input name | Digital inputs |
| Description of the input | EN 61131-2 types 1 and 3 |
| Connection method | Direct plug-in method |
| | 1-wire |
| Number of inputs | 32 |
| Protective circuit | Polarity reversal protection of the inputs Parallel diode (30 V, 5 s) |
| Input filter time | 3000 µs (default) |
| Input voltage range "0" signal | -3 V DC ... 5 V DC |
| Input voltage range "1" signal | 11 V DC ... 30 V DC |
| Nominal input current at $U_{IN}$ | 2.4 mA |

## Classifications

### eCl@ss

| | |
|---|---|
| eCl@ss 4.0 | 27240404 |
| eCl@ss 4.1 | 27240404 |
| eCl@ss 5.0 | 27242204 |
| eCl@ss 5.1 | 27242604 |
| eCl@ss 6.0 | 27242604 |
| eCl@ss 7.0 | 27242604 |
| eCl@ss 8.0 | 27242604 |

### ETIM

| | |
|---|---|
| ETIM 3.0 | EC001599 |
| ETIM 4.0 | EC001599 |
| ETIM 5.0 | EC001599 |

### UNSPSC

| | |
|---|---|
| UNSPSC 6.01 | 43172015 |
| UNSPSC 7.0901 | 43201404 |
| UNSPSC 11 | 39121311 |
| UNSPSC 12.01 | 39121311 |
| UNSPSC 13.2 | 39121311 |

# I/O module - AXL DI 32/1 - 2688035

## Approvals

### Approvals

Approvals

UL Listed / cUL Listed / BSH / RINA / DNV / cULus Listed

Ex Approvals

Approvals submitted

### Approval details

UL Listed

cUL Listed

BSH

RINA

DNV

cULus Listed

## Accessories

### Accessories

### Connector set

Connector set - AXL CNS 4L-O/D/UI/E1 - 2700982

Axioline F plug set (for e.g., AXL F DI32/1 1F)

# I/O module - AXL DI 32/1 - 2688035

## Accessories

### Device marking

Insert label - EMT (35X46)R - 0801604

Insert label, Roll, white, Unlabeled, Can be labeled with: THERMOMARK ROLL, THERMOMARK X, THERMOMARK S1.1, Mounting type: snapped into marker carrier, Lettering field: 35 x 46 mm

### DIN rail connector

Bus connector - AXL F BS F - 2688129

Axioline F bus base module for housing type F

### Terminal marking

Zack marker strip - ZB 20,3 AXL UNPRINTED - 0829579

Zack marker strip for Axioline F (device labeling), in 2 x 20.3 mm pitch, unprinted, 25-section, for individual labeling with B-STIFT 0.8, X-PEN, or CMS-P1-PLOTTER

Zack Marker strip, flat - ZBF 10/5,8 AXL UNPRINTED - 0829580

Zack marker strip, flat, in 10 mm pitch, unprinted, 10-section, for individual labeling with M-PEN 0,8, X-PEN, or CMS-P1-PLOTTER

## Drawings

# I/O module - AXL DI 32/1 - 2688035

Dimensioned drawing

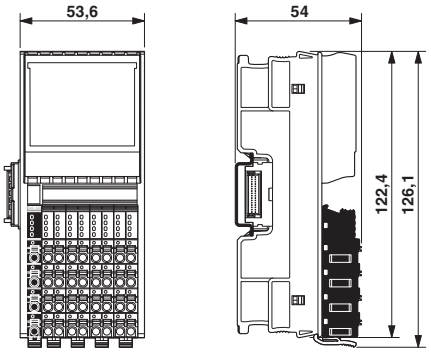


Connection diagram

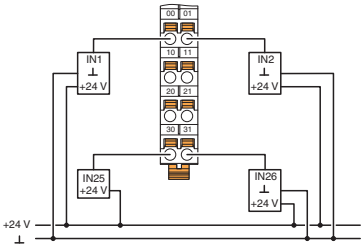


Block diagram

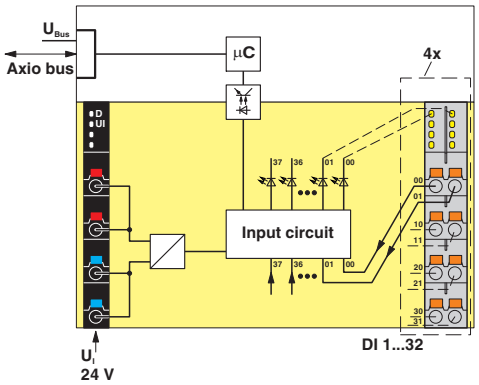


Internal wiring of the terminal points

Phoenix Contact 2014 © - all rights reserved
http://www.phoenixcontact.com