THIS DRAWING IS UNPUBLISHED. RELEASED FOR PUBLICATION -,- .
© COPYRIGHT 2003 By - ALL RIGHTS RESERVED.

| LOC | DIST |
|---|---|
| J | — |

REVISIONS 変更

| P | LTR | DESCRIPTION | DATE | DWN | APVD |
|---|---|---|---|---|---|
| | A2 | REVISED PER ECO-11-005140 | 28MAR11 | RK | HMR |

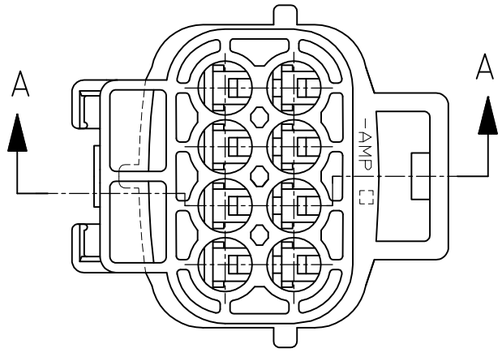


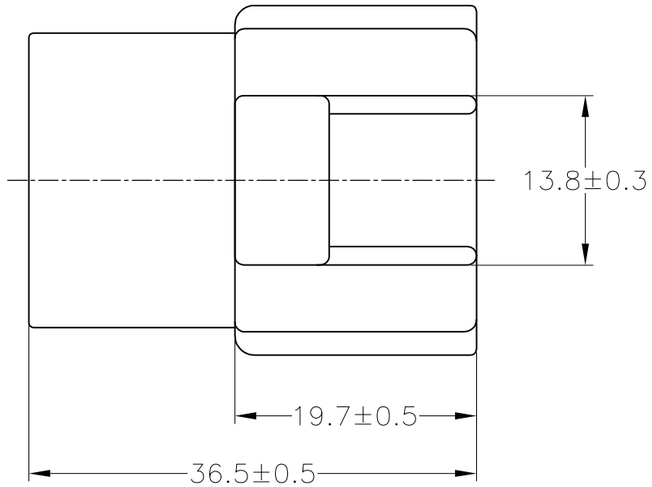


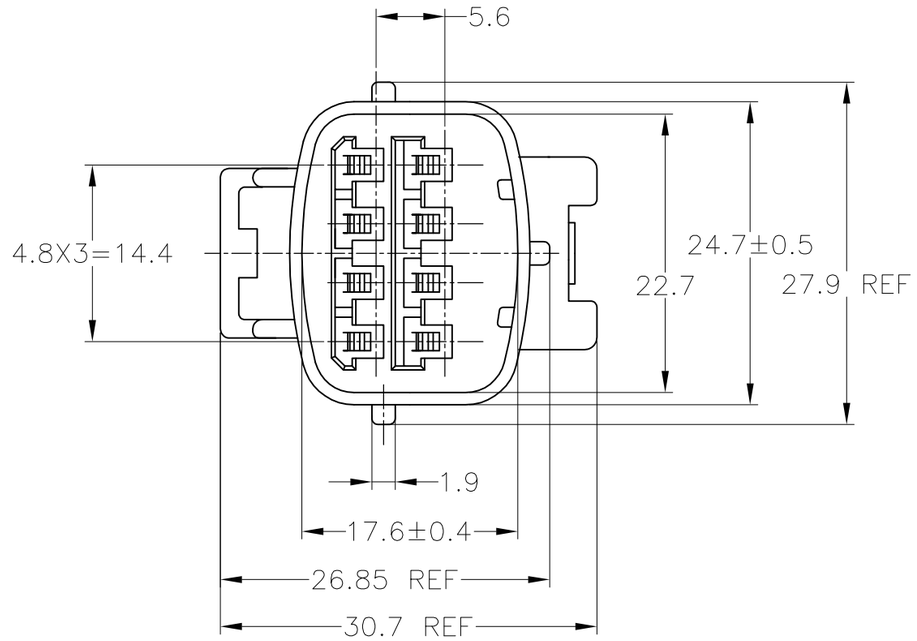


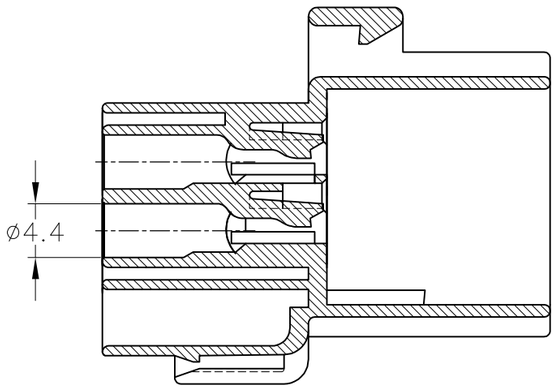


A-A

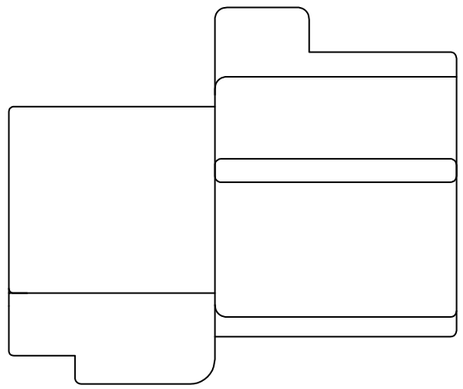

1. 嵌合相手型番：174982
2. 本品はダブルロックプレートPN 174985を装着して使用する。

1. FOR PLUG HOUSING (PN 174982)
2. THIS PART MUST BE USED WITH DOUBLE LOCK PLATE (PN 174985)

| COLOR | PART NUMBER |
|---|---|
| BLACK | 174984-2 |
| GRAY | 174984-1 |

THIS DRAWING IS A CONTROLLED DOCUMENT.

TOLERANCE UNLESS OTHERWISE SPECIFIED: 一般公差

| | | |
|---|---|---|
| 0<x≤ 10 | : | ±0.2 |
| 10<x≤ 30 | : | ±0.25 |
| 30<x≤100 | : | ±0.3 |
| ANGLE 角度 | ; | ±3° |

DIMENSIONS: 単位： 粍 mm

TOLERANCES UNLESS OTHERWISE SPECIFIED: 一般公差

| | |
|---|---|
| 0 PLC | ± - |
| 1 PLC | ± - |
| 2 PLC | ± - |
| 3 PLC | ± - |
| 4 PLC | ± - |
| ANGLES | ± - |

MATERIAL 材料: PBT

~~FINISH~~ ~~仕上~~: COLOR: SEE TABLE

| | | |
|---|---|---|
| DWN | A. YAMAGUCHI | 04APR03 |
| CHK | K. BETSUI | 04APR03 |
| APVD | K. BETSUI | 04APR03 |
| PRODUCT SPEC 製品規格 | 108-5262 | |
| APPLICATION SPEC 取付適用規格 | — | |
| WEIGHT | — | |

TE Connectivity

NAME 名称: 8POSITION ECONOSEAL J-MARK II+ CONNECTOR CAP HOUSING

| SIZE | CAGE CODE | DRAWING NO 番号 | RESTRICTED TO |
|---|---|---|---|
| A3 | 00779 | C-174984 | — |

CUSTOMER DRAWING | SCALE 尺度 2:1 | SHEET 1 OF 1 | REV A2