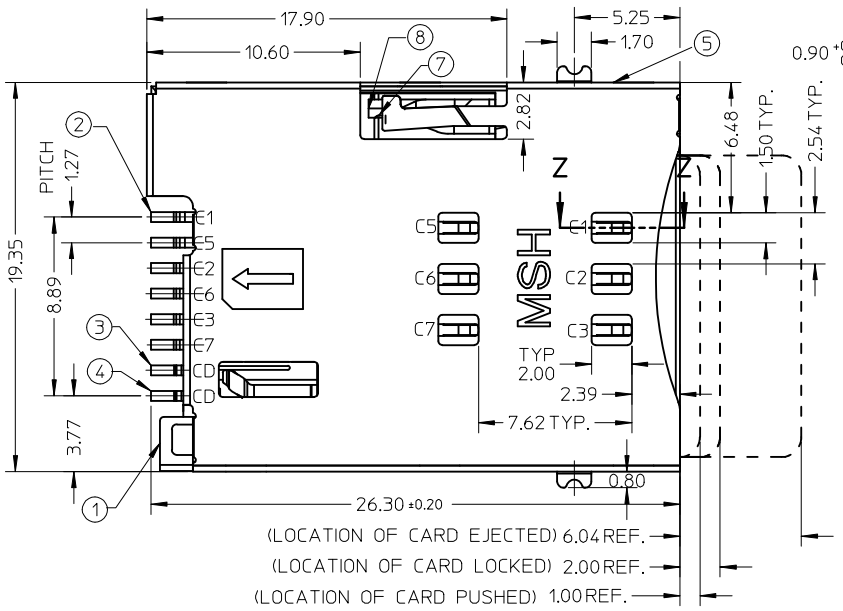

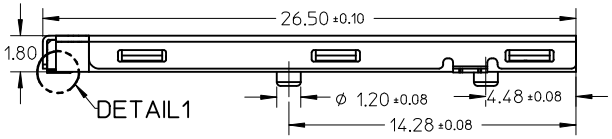

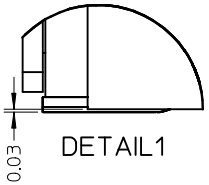

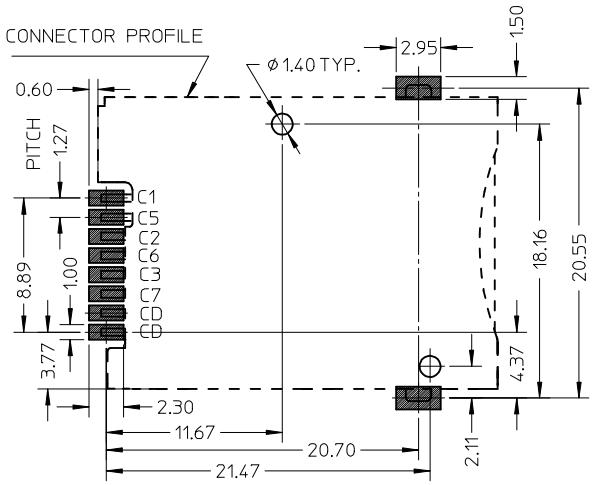

RECOMMENDED PCB LAYOUT
TOLERANCE +/-0.05MM

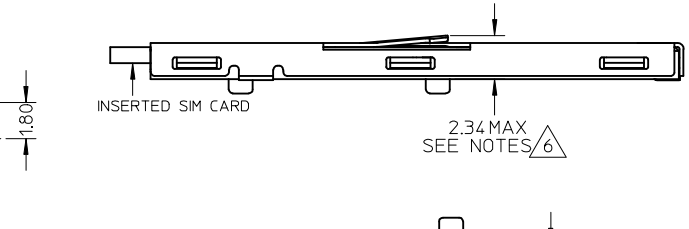

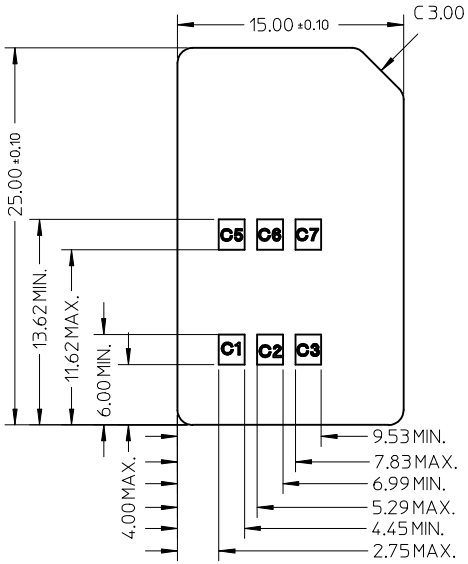

APPLICABLE CARD SIZE
THICKNESS:0.76+/-0.08

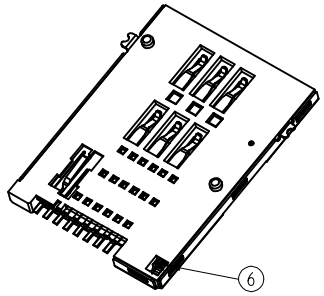

NOTES:
1 FINISH:
1-1 TERMINAL :
50~200μ" NICKEL UNDER PLATED
30μ" MIN GOLD PLATING ON CONTACT AREA
3μ" MIN GOLD FLASH ON SOLDERING AREA
1-2 SHELL :
50~200μ"NICKEL UNDER PLATED
3μ" MIN GOLD FLASH ON SOLDERING AREA
1-3 DETECT PIN :
50~200μ" NICKEL UNDER PLATED
3μ" MIN GOLD PLATING ON CONTACT AREA
3μ" MIN GOLD FLASH ON SOLDERING AREA
1-4 HOUSING:G/F 45%.UL94V-0,BLACK
1-5 HEART CAM :G/F 30%.UL94V-0,BLACK
2 SOLDER TAIL COPLANARITY:0.08MM MAX.
3 TERMINAL TIP MUST SINK INTO HOUSING
4 PRODUCT COMPLIANT TO ROHS DIRECTIVE 2002/95/EC AND ELV DIRECTIVE 2000/53/EC
5 DETECT SWITCH: INSERT CARD=ON (NORMAL=OPEN)
6 SPRING RISE UP DURING PUSH-PUSH PERIOD

CARD INSERTED WITHOUT CARD

NO.	DESCRIPTION	Q'TY	MATERIAL
1	HOUSING	1	HIGH TEMPERATURE THERMOPLASTIC
2	TERMINAL	6	COPPER ALLOY
3	DETECT PIN LOWER	1	COPPER ALLOY
4	DETECT PIN UPPER	1	COPPER ALLOY
5	SHELLL	1	STAINLESS STEEL
6	COIL SPRING	1	PIANO WIRE
7	HEART CAM	1	NYLON
8	CAM PIN	1	STAINLESS STEEL

REVISED
EC NO: SH2009-0234 2009/02/11
DRWN:YPWU 2008/10/28
CHKD:YLZHU02 2009/03/11
APPR: HWWANG
DESCRIPTION
REV E

QUALITY SYMBOLS
▼=0
Ⓒ=0

GENERAL TOLERANCES (UNLESS SPECIFIED)

	mm	INCH
4 PLACES	± ---	± ---
3 PLACES	± ---	± ---
2 PLACES	± 0.15	± ---
1 PLACE	± ---	± ---
ANGULAR ±---°		

DRAFT WHERE APPLICABLE MUST REMAIN WITHIN DIMENSIONS

DIMENSION STYLE: MM ONLY
SCALE: 4:1
DESIGN UNITS: METRIC
THIRD ANGLE PROJECTION

DRAWN BY	LHSHEN	DATE 2007/07/09
CHECKED BY	XUXIANG	DATE 2007/08/30
APPROVED BY	HWWANG	DATE 2007/08/30

TITLE
PUSH PUSH 6 PINS SIM WITH DETECT PIN&POST SALES DRAWING

molex MOLEX INCORPORATED

MATERIAL NO. 475531001
DOCUMENT NO. SD-47553-101
SHEET NO. 1 OF 1
SIZE A3

THIS DRAWING CONTAINS INFORMATION THAT IS PROPRIETARY TO MOLEX INCORPORATED AND SHOULD NOT BE USED WITHOUT WRITTEN PERMISSION