ENGLISH

Datasheet

Steel Instrument Case, Grey, 110 x 200 x 72mm

RS Stock number 232-080

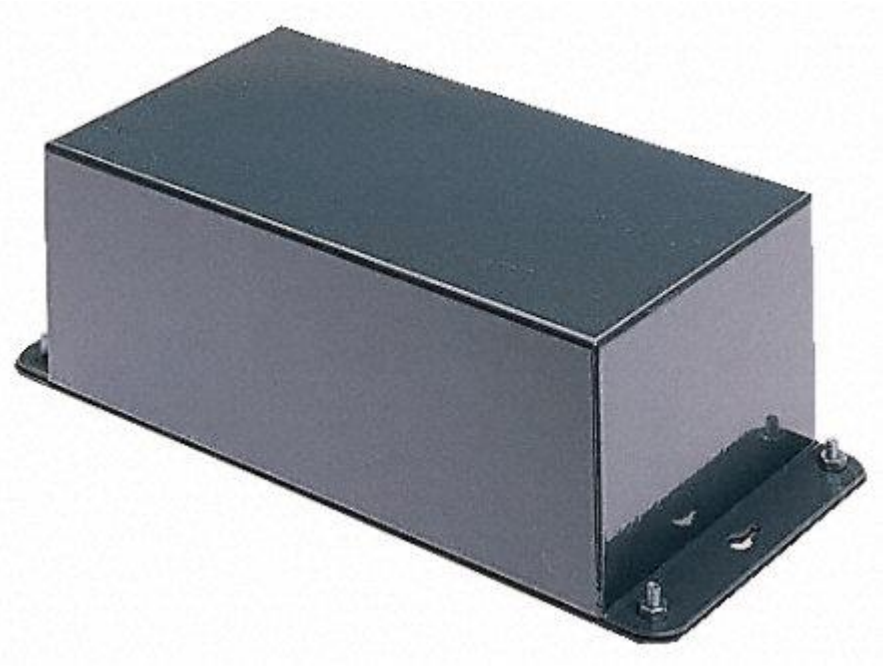

Dimensions

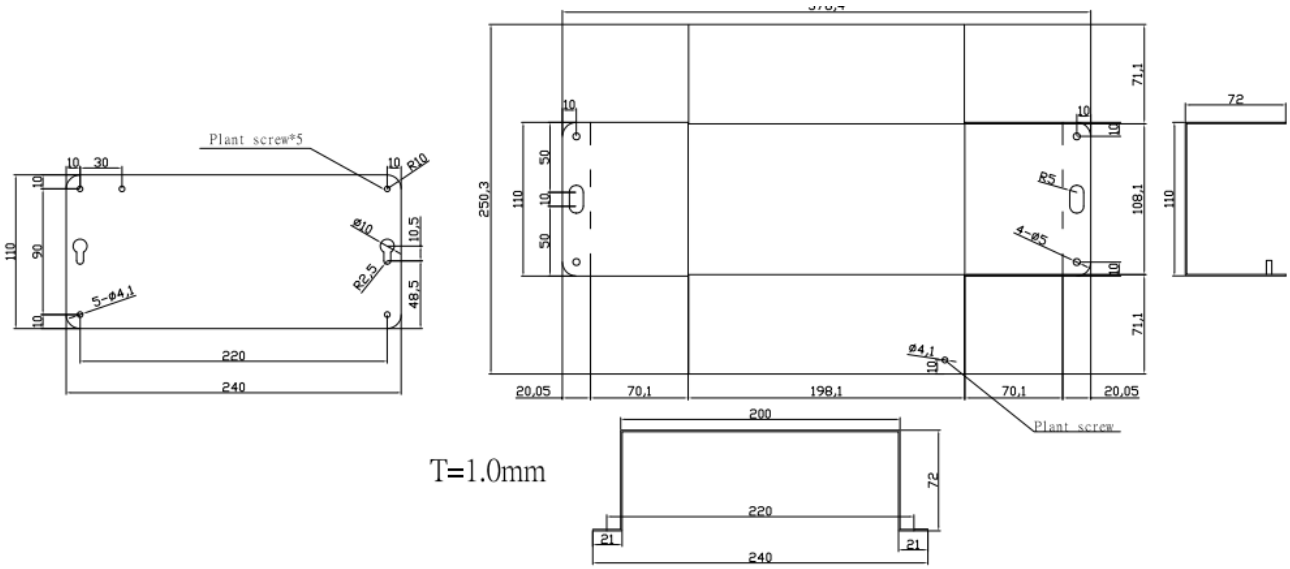

RS, Professionally Approved Products, gives you professional quality parts across all products categories. Our range has been testified by engineers as giving comparable quality to that of the leading brands without paying a premium price.