REVISIONS		
ISS	ZONE	DESCRIPTION\PER REQUEST\DATE

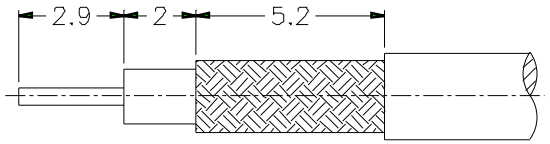

RECOMMENDED
CABLE STRIPPING DIM'S

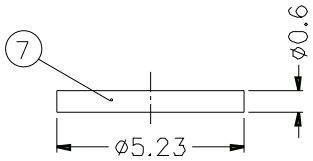

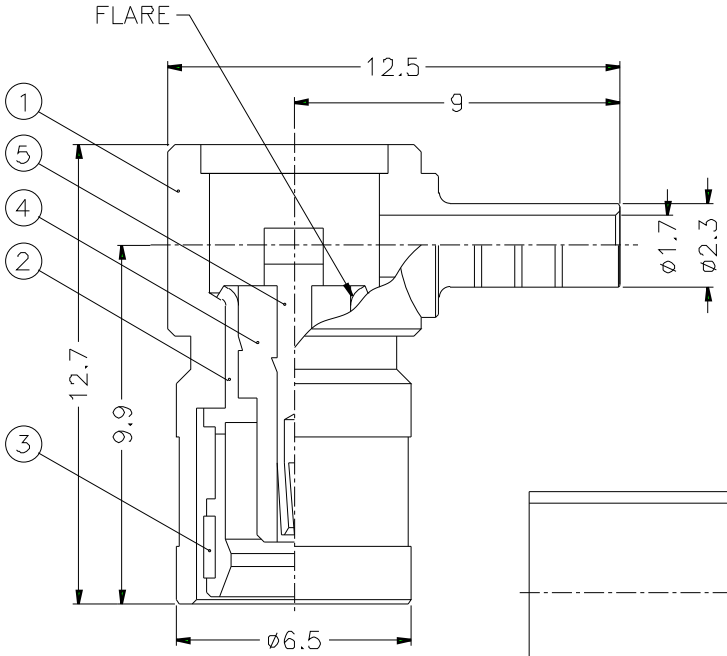

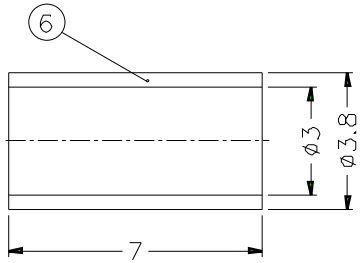

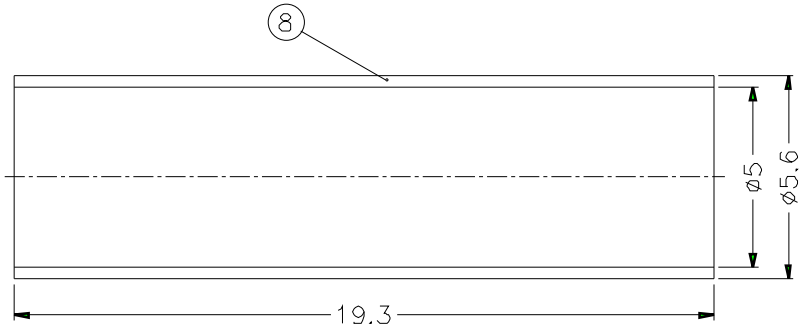

NOTES: FINISH (PLATING THICKNESS IN MICRO-INCHES)
1. BRASS PER QQ-B-626
2. BRASS PER QQ-B-613
3. GOLD PL. 3 MIN. THICK OVER NICKEL PL. 100 MIN. THICK OVER COPPER STRIKE
4. BERYLLIUM COPPER PER QQ-C-530
5. GOLD PL. 30 MIN. THICK OVER NICKEL PL. 100 MIN. THICK OVER COPPER STRIKE
6. TEFLON MIL-P-19468
7. ZINC DIECAST

1. CRIMPED FERRULE
HEX CRIMP SIZE .128"
2. CONTACT PIN TO SOLDER

NO.	DESCRIPTION	MATERIAL	FINISH	Q'TY	DRAWING NO.
8	HEAT SHRINK TUBING			1	HT-56/5X193
7	COVER	NOTE 2	NOTE 3	1	CV-523X06-T
6	FERRULE	COPPER	NOTE 3	1	FR-38/3X7C
5	CONTACT PIN	NOTE 4	NOTE 5	1	SMB5091-5-B
4	INSULATOR	NOTE 6	NATURAL	1	SMB5003-3T-50
3	RETAINER RING	NOTE 4	NATURAL	1	SMB5000-6
2	BODY	NOTE 1	NOTE 3	1	SMB6112D1-2-C
1	HOUSING	NOTE 7	NOTE 3	1	SMB6112D1-1-23/17

DIMENSIONS ARE IN MILLIMETERS

UNLESS OTHERWISE SPECIFIED TOLERANCES
0.5-6 = ±0.2
6-30 = ±0.4
30-120 = ±0.6
120-315 = ±1
315-1000 = ±1.6
1000-2000 = ±2.4

SCALE 5/1 | ISSUE A

PART NO. SMB6112D1-3GT30G-5-50

APPROVED | DATE 10-11-01'

CHECKED | DATE 10-11-01'

DRAWN | DATE 10-11-01'

FILE NO

Amphenol

TITLE SMB R/A CRIMP PLUG (FOR RG-174/U,188A/U,316/U)

DRAWING NO. KJ-SMB6112D1-3GT30G-316U-50

ITEM NO.