WIRING DIAGRAM

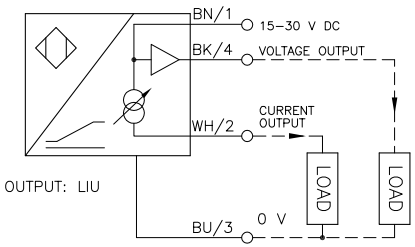

OUTPUT: LIU

LOCKNUT LN-M30

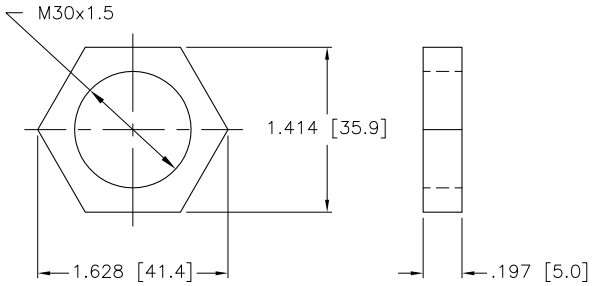

SPECIFICATIONS

MEASURING RANGE [A...B]	2.0–12.0 mm
MIN. REPEAT ACCURACY	≤1%
MAX. RELATIVE TEMPERATURE DRIFT	≤ ±.06%/C°
OPERATING TEMPERATURE	−10°C to +70°C (−14°F to +158°F)
OPERATING VOLTAGE	15–30 VDC
RIPPLE	≤10%
NO-LOAD CURRENT	≤8 mA
RATED INSULATION VOLTAGE	≤0.5 kV
OUTPUT FUNCTION	4-WIRE, ANALOG
SHORT-CIRCUIT PROTECTED	YES
WIRE-BREAK PROTECTION	INCORPORATED
REVERSE POLARITY PROTECTION	INCORPORATED
VOLTAGE OUTPUT	0–10 V
CURRENT OUTPUT	0–20 mA
LINEARITY TOLERANCE	≤ 3% OF FINAL VALUE
VOLTAGE OUTPUT LOAD RESISTANCE	≥ 4.7 kΩ
CURRENT OUTPUT LOAD RESISTOR	≤ 0.4 kΩ
READING RATE FREQUENCY	80 Hz
DEGREE OF PROTECTION	IP 67
HOUSING MATERIAL	BRASS, CHROME PLATED
ACTIVE FACE	PLASTIC, PA12-GF30

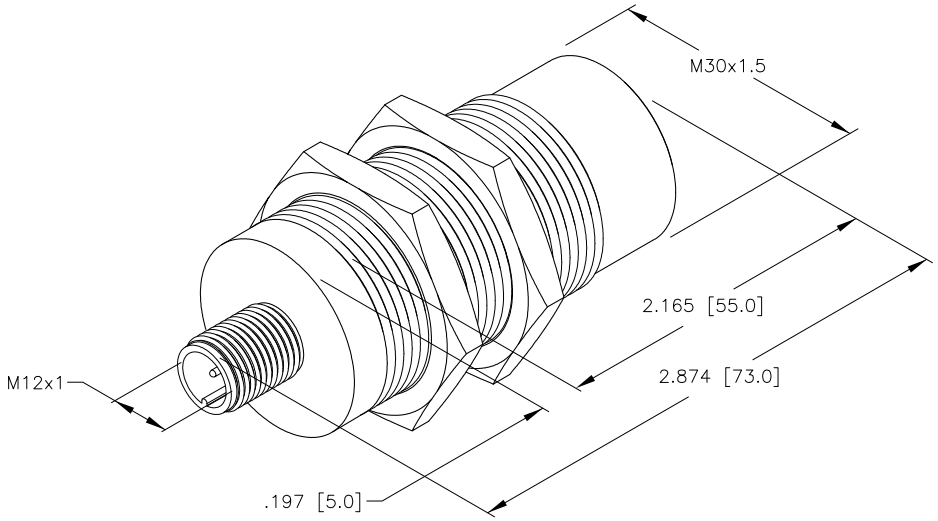

TYPICAL RESPONSE CURVE

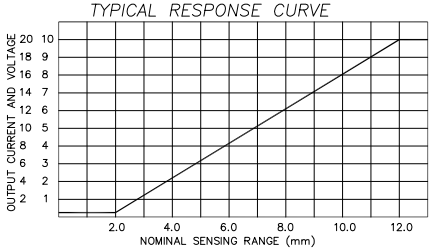

SOURCE DRAWING - FOR REFERENCE ONLY

RELATED DOCUMENTS	3RD ANGLE PROJECTION	THIS DRAWING IS PROPERTY OF TURCK INC. USE OF THIS DOCUMENT WITHOUT WRITTEN PERMISSION IS PROHIBITED.	TURCK INC *High Technology Sensors and Automation Controls*	3000 CAMPUS DRIVE MINNEAPOLIS, MN 55441 1-800-544-7769 (763) 553-7300 (763) 553-0708 fax turck.com
1. 2. 3. 4.				
MATERIAL	ALL DIMENSIONS DISPLAYED ON THIS DRAWING ARE FOR REFERENCE ONLY	DRFT RDS / DATE 11/02/05	DESCRIPTION NI15-M30E-LIU-H1141	
		DSGN EH / SCALE NONE		
FINISH	CONTACT TURCK FOR MORE INFORMATION	UNIT OF MEASUREMENT **INCH [MILLIMETER]** DO NOT SCALE THIS DRAWING	IDENTIFICATION NO. M1535564	REV A
			FILE: M1535564	SHEET 1 OF 1

REV	DESCRIPTION	BY	DATE	ECO NO.
A	DRAWING RELEASE	RDS	11/02/05	