HRS DRAWING FOR REFERENCE ONLY

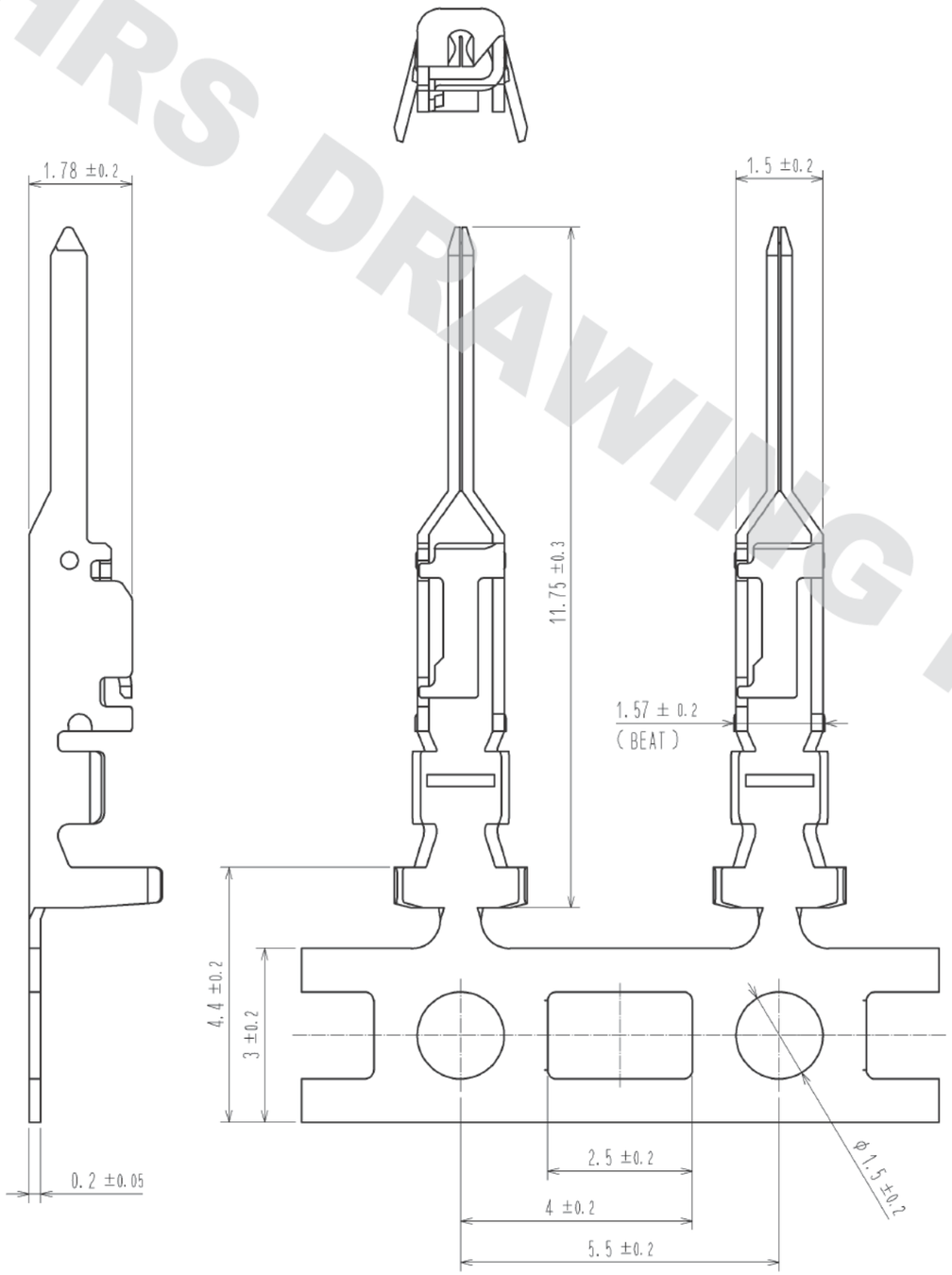

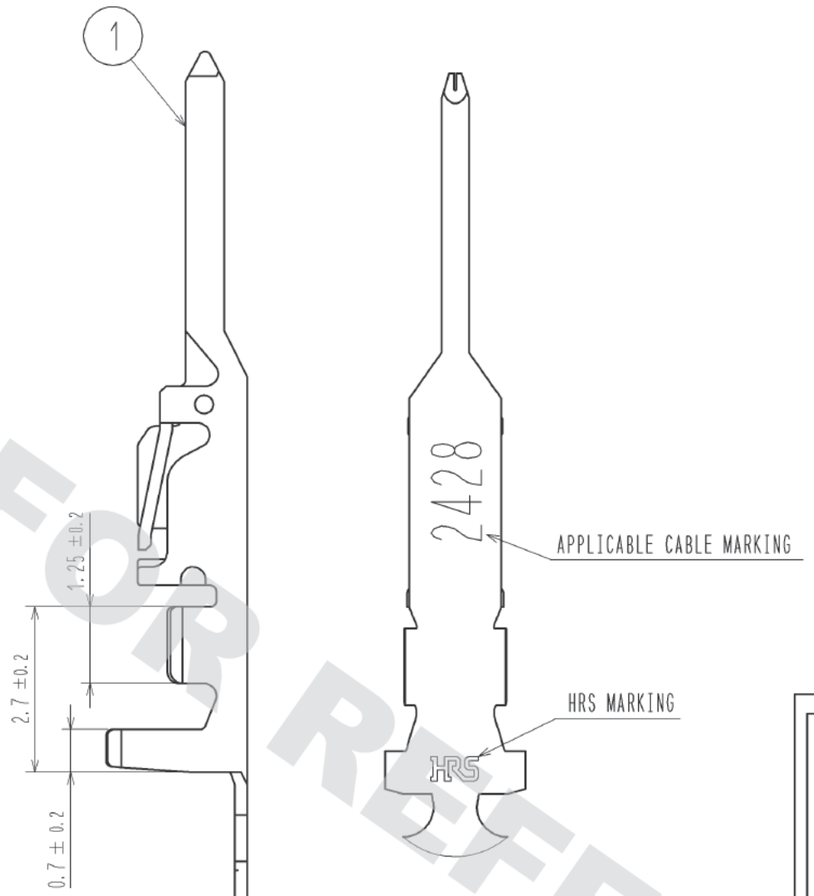

2 STYLE AND DIMENSION OF REEL

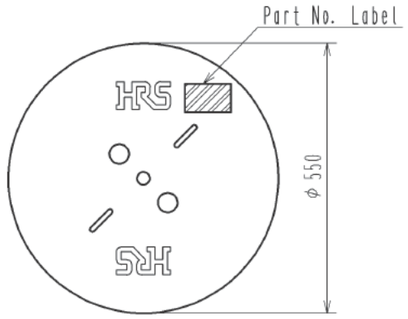

Detail of part No. Label

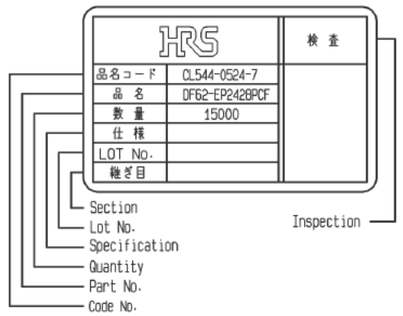

NOTE 1. 1RL:15000 CONTACTS.
2 STYLE OF REEL AND BOX ARE SHOWN IN FIGURE.
3. A MAXIMUM OF 5 REELS ARE PACKED UP IN ONE BOX.
4. PLEASE BE SURE TO CHECK THE FORM OF CRIMPING USING A CABLE. WHEN YOU ADJUST APPLICATOR.
5. THE DIMENSIONS IN PARENTHESIS ARE FOR REFERENCE.

NO.	MATERIAL	FINISH . REMARKS	NO.	MATERIAL	FINISH . REMARKS
			1	PHOSPHOR BRONZE	TIN PLATING 1μm MIN

UNITS mm	SCALE 10 : 1	COUNT	DESCRIPTION OF REVISIONS	DESIGNED	CHECKED	DATE

HRS HIROSE ELECTRIC CO., LTD.

APPROVED	KI. AKIYAMA	14.04.26	DRAWING NO.	EDC3-344685-00
CHECKED	KI. AKIYAMA	14.04.26	PART NO.	DF62-EP2428PCF
DESIGNED	TS. KUMAZAWA	14.04.25	CODE NO.	CL544-0524-7-00
DRAWN	TS. KUMAZAWA	14.04.25		1/1

DRAWING FOR REFERENCE: This is subject to change without notice
05/31/2014