DWG. NO. SD-50802-002

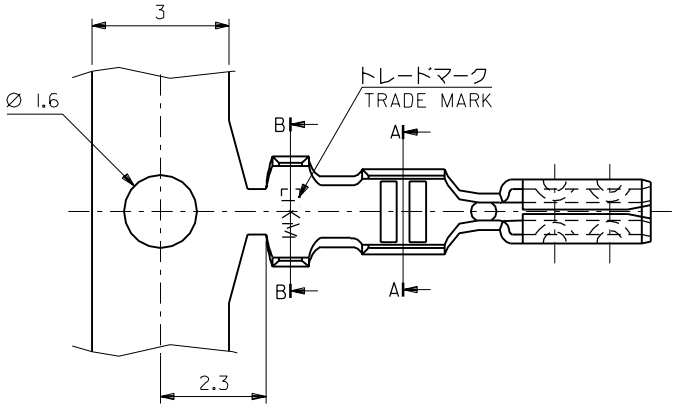

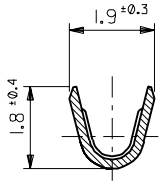

断面 A-A
SECT. A-A

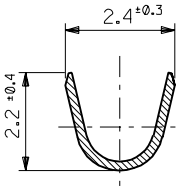

断面 B-B
SECT. B-B

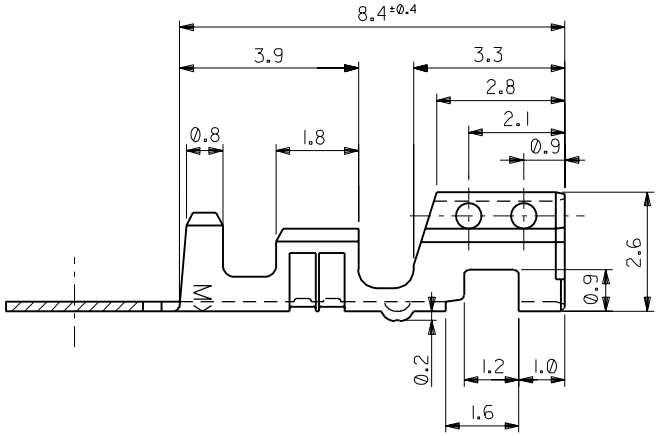

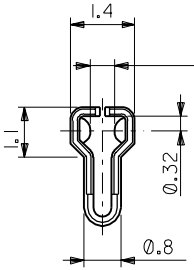

挿抜力により管理
CONTROL TO INSERTION & EXTRACTION FORCE.

注記 NOTES:

1. 適合ハウジング:
APPLICABLE HOUSING: 51191-**00

錫メッキ済リン青銅 PRE-TINNED PHOS-BRO.	50802-8100	バラ状 LOOSE
錫メッキ済リン青銅 PRE-TINNED PHOS-BRO.	50802-8000	連鎖状 CHAIN
錫メッキ済黄銅 PRE-TINNED BRASS	50802-9101	バラ状 LOOSE
錫メッキ済黄銅 PRE-TINNED BRASS	50802-9001	連鎖状 CHAIN
材料 MATERIAL	MATERIAL NO.	端子形状 FORM

MODEL NO. 50802-****

DO NOT SCALE DRAWING

ES4NO. DRWN: CH'K: APPR:	ES3NO. DRWN: CH'K: APPR:	ES2NO. DRWN: CH'K: APPR:	ES1NO. DRWN: CH'K: APPR:	ES0NO. JC807766 DRWN: S.MATSUZAKI '98/4/9 CH'K: S.KUNISHI '98/4/10 APPR: M.FUKUSHIMA '98/4/10	RELEASED
				0	REV

DESCRIPTION

MATERIAL 材料: 表参照 (t=0.203) SEE TABLE

FINISH 仕上げ: —//—

WIRE RANGE 適用電線範囲: AWG #22～#28 0.33～0.08mm²

INS. RANGE 被覆外径: Ø1.15～1.9

GENERAL TOLERANCES: (UNLESS SPECIFIED) 一般公差

10 UNDER 未満		±0.2
10 OVER 以上	30 UNDER 未満	±0.25
30 OVER 以上		±0.3
ANGLE 角度		±3°

SCALE: 2:1

DESIGN UNITS: ☒ mm ☐ INCH

THIRD ANGLE PROJECTION

DIMENSIONS: ☐ mm/INCH ☐ INCH/mm ☒ mm ONLY

SHT | REV

REVISE ON CAD ONLY

DRAWN BY & DATE: S.MATSUZAKI '98/4/9

CHECKED BY & DATE: S.KUNISHI '98/4/10

APPROVED BY & DATE: M.FUKUSHIMA '98/4/10

CAD FILENAME: 50802002.S01

TITLE: 2.5 WIRE TO BOARD CONN. CRIMP RECEPTACLE

MOLEX INCORPORATED

MATERIAL NO.: 50802-****

DRAWING NO.: SD-50802-002

SHEET NO.: 1/1

SIZE: B

THIS DRAWING CONTAINS INFORMATION THAT IS PROPRIETARY TO MOLEX INCORPORATED AND SHOULD NOT BE USED WITHOUT WRITTEN PERMISSION.

50802002.S01

EN-02J(097) MXJ-54