WIRING DIAGRAMS

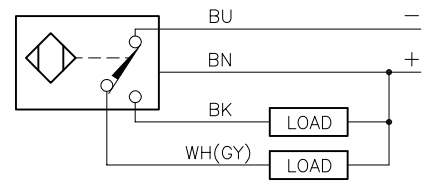

OUTPUT: VN6X

SHORT–CIRCUIT AND OVERLOAD PROTECTED

LOCKNUT LN–M12

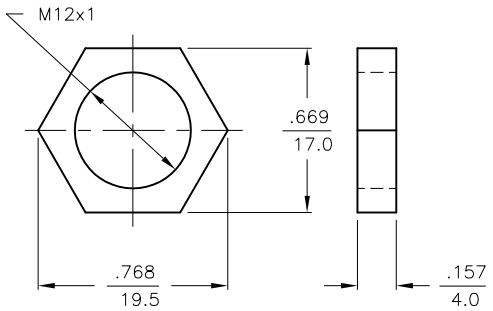

SPECIFICATIONS

RATED OPERATING DISTANCE	2mm = .079"
MOUNTING MODE	FLUSH
TEMPERATURE DRIFT	≤±10%
HYSTERESIS	3–15%
MIN. REPEAT ACCURACY	≤2%
OPERATING TEMPERATURE	−25C to +70°C (+13°F to +158°F)
RATED OPERATIONAL VOLTAGE	10–30 VDC
RESIDUAL RIPPLE	≤10%
DC RATED OPERATIONAL CURRENT	≤200 mA
NO–LOAD CURRENT	≤15 mA
RESIDUAL CURRENT	≤0.1 mA
RATED INSULATION VOLTAGE	≤0.5 kV
SHORT–CIRCUIT PROTECTION	YES
MAX. VOLTAGE DROP	≤1.8 V
WIRE BREAKAGE PROTECTION	INCORPORATED
REVERSE POLARITY PROTECTION	INCORPORATED
MAX. SWITCHING FREQUENCY	≤2.0 kHz
OUTPUT FUNCTION	4–WIRE, CHANGE–OVER, NPN
HOUSING MATERIAL	METAL, BRASS, CHROME–PLATED
ACTIVE FACE MATERIAL	PLASTIC, PA12–GF30
END CAP	PLASTIC, EPTR
CABLE	ø5.3, PVC
VIBRATION RESISTANCE	55 Hz (IN ALL 3 PLANES)
SHOCK RESISTANCE	30 g, 11 ms
DEGREE OF PROTECTION	IP67
SWITCHING STATUS INDICATION	LED, YELLOW

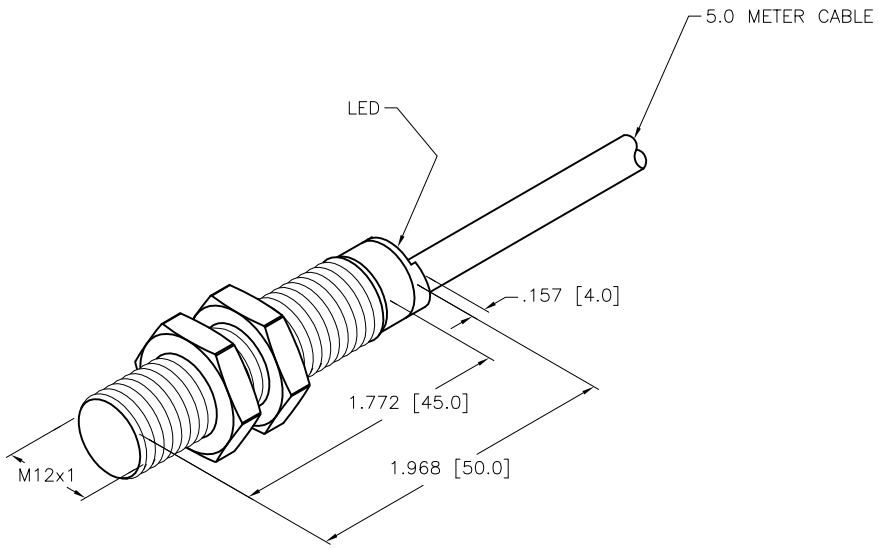

SOURCE DRAWING - FOR REFERENCE ONLY

REV	DESCRIPTION	BY	DATE	ECO NO.
B	UPDATE CABLE DIAMETER	KMY	04/10/12	37143

RELATED DOCUMENTS
1.
2.
3.
4.

3RD ANGLE PROJECTION

MATERIAL: SEE SPECS

FINISH: SEE SPECS

ALL DIMENSIONS DISPLAYED ON THIS DRAWING ARE FOR REFERENCE ONLY

CONTACT TURCK FOR MORE INFORMATION

THIS DRAWING IS CONFIDENTIAL AND THE PROPERTY OF TURCK INC. USE OF THIS DOCUMENT WITHOUT WRITTEN PERMISSION IS PROHIBITED.

DRFT: RDS — DATE: 01/30/12
APVD: J.M. — SCALE: 1=1.0

UNIT OF MEASUREMENT
INCH [MILLIMETER]
DO NOT SCALE THIS DRAWING

TURCK INC
High Technology Sensors and Automation Controls
3000 CAMPUS DRIVE
MINNEAPOLIS, MN 55441
1–800–544–7769
(763) 553–7300
(763) 553–0708 fax
turck.com

DESCRIPTION: BI 2–M12–VN6X 5M

IDENTIFICATION NO.: T1640291 — REV: B

FILE: T1640291 — SHEET 1 OF 1