KEMET Part Number: PHE850ED5680MD17R06L2

(F850DF683M300C)

PHE850/F850, Film, Metallized Polypropylene, Safety, 0.068 uF, 20%, 300 VAC (Y2), 1250 VDC, 110°C, Lead Spacing = 22.5mm

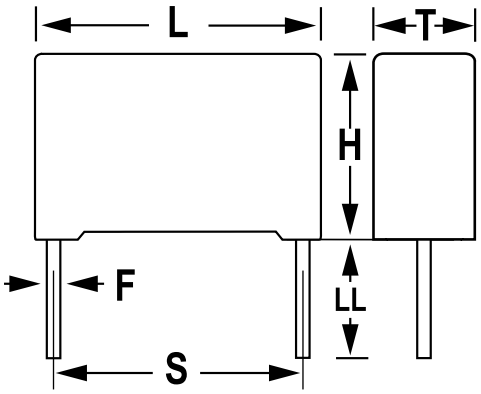

General Information	
Supplier:	KEMET
Series:	PHE850/F850
Dielectric:	Metallized Polypropylene
Style:	Radial
Features:	EMI Safety
RoHS:	Yes
Lead:	Wire Leads
Qualifications:	ENEC, UL, cUL
Notes:	Not For New Design, Please Check Possible Alternative Parts (AltPart)

Dimensions	
L	26mm MAX
H	16.5mm MAX
T	7mm MAX
S	22.5mm +/-0.4mm
LL	6mm NOM
F	0.8mm NOM

Specifications	
Capacitance:	0.068 uF
Capacitance Tolerance:	20%
Voltage AC:	300 VAC (Y2)
Voltage DC:	1250 VDC
Temperature Range:	-55/+110C
Rated Temperature:	110°C
Dissipation Factor:	0.15% 1kHz, 0.20% 10kHz, 0.60% 100kHz
Insulation Resistance:	30 GOhms
Max dV/dt:	100 V/us
Safety Class:	Y2

Packaging Specifications	
Packaging:	Bulk, Tray
Packaging Quantity:	216

Statements of suitability for certain applications are based on our knowledge of typical operating conditions for such applications, but are not intended to constitute - and we specifically disclaim - any warranty concerning suitability for a specific customer application or use. This Information is intended for use only by customers who have the requisite experience and capability to determine the correct products for their application. Any technical advice inferred from this Information or otherwise provided by us with reference to the use of our products is given gratis, and we assume no obligation or liability for the advice given or results obtained.

© 2006 - 2019 KEMET