SIEMENS

Data sheet 3SU1030-0BB60-0AA0

Figure similar

PUSHBUTTON, 22MM, ROUND, PLASTIC WITH METAL FRONT RING, WHITE, RAISED BUTTON MOMENTARY CONTACT TYPE

product brand name		SIRIUS ACT
Product designation		Commanding and signaling devices
Design of the product		Pushbutton

Actuator:		
Design of the operating mechanism		pushbutton with raised button
Manner of function of the actuating element		Momentary contact type
Product expansion optional Light source		No
Color		
• of the actuating element		White
Material of the actuating element		plastic
Shape of the actuating element		round
Outer diameter of the actuating element	mm	29.45
Type of unlocking device		without

Front ring:		
Product component front ring		Yes
Design of the front ring		Standard
Material of the front ring		Metal, matt
Color of the front ring		sand gray

General technical data:		
Vibration resistance		
• acc. to IEC 60068-2-6		10 ... 500 Hz: 5g
Operating frequency maximum	1/h	3 600
Mechanical service life (switching cycles)		
• typical		10 000 000

Changes preserved
© Copyright Siemens AG

Equipment marking		
• acc. to DIN EN 61346-2		S
• acc. to DIN EN 81346-2		S

Ambient conditions:

Ambient temperature		
• during operation	°C	-25 ... +70
• during storage	°C	-40 ... +80

Installation/ mounting/ dimensions:

Height	mm	29.45
Width	mm	29.45
Shape of the installation opening		round
Mounting diameter	mm	22

Certificates/ approvals:

Further information

Information- and Downloadcenter (Catalogs, Brochures,…)
http://www.siemens.com/industrial-controls/catalogs

Industry Mall (Online ordering system)
http://www.siemens.com/industrymall

Cax online generator
http://support.automation.siemens.com/WW/CAXorder/default.aspx?lang=en&mlfb=3SU10300BB600AA0

Service&Support (Manuals, Certificates, Characteristics, FAQs,...)
http://support.automation.siemens.com/WW/view/en/3SU10300BB600AA0/all

Image database (product images, 2D dimension drawings, 3D models, device circuit diagrams, EPLAN macros, ...)
http://www.automation.siemens.com/bilddb/cax_de.aspx?mlfb=3SU10300BB600AA0&lang=en

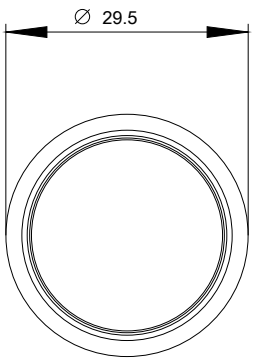

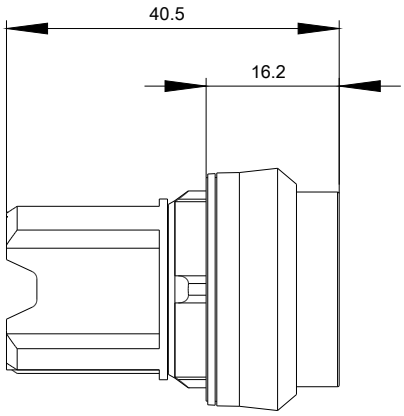

Changes preserved
© Copyright Siemens AG

last modified: 09.03.2015

Changes preserved
© Copyright Siemens AG