PCB BOARD LAYOUT

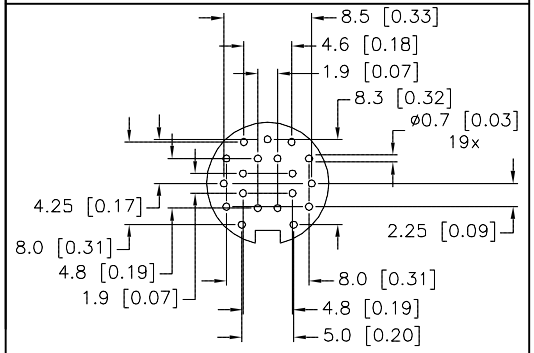

FEMALE END VIEW

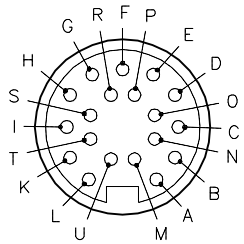

M16 connector

SPECIFICATIONS

CONTACT CARRIER MATERIAL	TPU
CONTACT MATERIAL/PLATING	BRASS/GOLD
HOUSING MATERIAL/PLATING	BRASS/NICKEL
RATED CURRENT [A]	3.0 A
RATED VOLTAGE [V]	60 V AC/DC
CONDUCTORS	PCB PINS
TEMPERATURE RANGE	−40°C to +80°C (−40°F to +176°F)
PROTECTION CLASS	MEETS IEC IP67

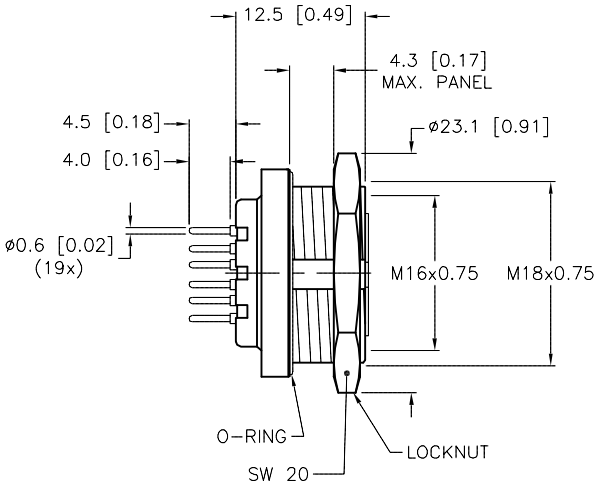

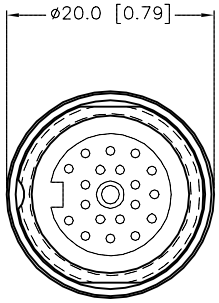

END VIEW
LOCKNUT NOT SHOWN

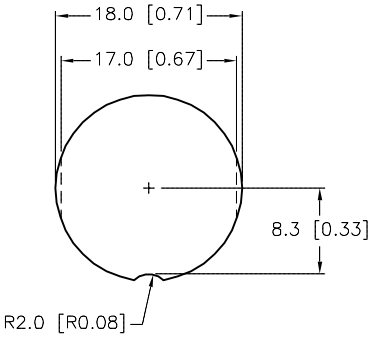

MOUNTING HOLE

SOURCE DRAWING - FOR REFERENCE ONLY

RELATED DOCUMENTS	3RD ANGLE PROJECTION	THIS DRAWING IS CONFIDENTIAL AND THE PROPERTY OF TURCK INC. USE OF THIS DOCUMENT WITHOUT WRITTEN PERMISSION IS PROHIBITED.	TURCK INC *High Technology Sensors and Automation Controls*	3000 CAMPUS DRIVE MINNEAPOLIS, MN 55441 1-800-544-7769 (763) 553-7300 (763) 553-0708 fax turck.com
1. 2. 3. 4.				
MATERIAL: SEE SPECIFICATIONS	ALL DIMENSIONS DISPLAYED ON THIS DRAWING ARE FOR REFERENCE ONLY	DRFT JBJ / DATE 01/21/04	DESCRIPTION: BKFD 19-PCB	
		APVD / SCALE 1=.7		
FINISH: SEE SPECIFICATIONS	CONTACT TURCK FOR MORE INFORMATION	UNIT OF MEASUREMENT: **MILLIMETER [INCH]**	IDENTIFICATION NO.: U0930-12	REV: C
		DO NOT SCALE THIS DRAWING	FILE: U0930-12	SHEET 1 OF 1

REV	DESCRIPTION	BY	DATE	ECO NO.
C	UPDATE CONTACT CARRIER MATERIAL	KMY	02/19/13	41344

Approved 02/28/2013, work order #38867 by M.B.