This document involves proprietary design rights of T & B/Ansley Corporation, and all design, manufacturing, reproduction, use and sale rights regarding the same are expressly reserved. It is submitted for a specific purpose and the recipient, by accepting this document, assumes custody and control and agrees to take reasonable precautions (a) that this document will not be copied and reproduced in whole or in part, nor its contents revealed in any manner or to any person except to meet the purpose for which it was delivered and (b) that any special features peculiar to this design will not be incorporated in other projects without the express permission of T & B/Ansley Corporation

1. HARDWARE SHOWN IS COMPATIBLE WITH FORMER T&B BACKSHELLS AND CONNECTORS ONLY.

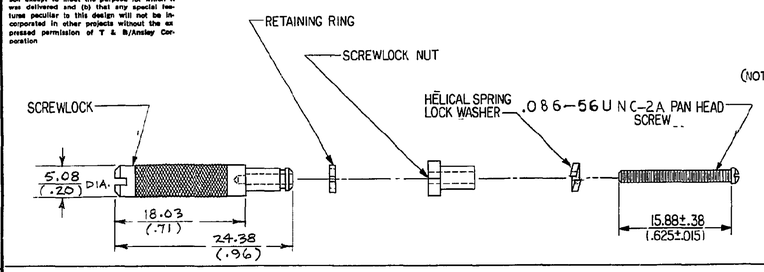

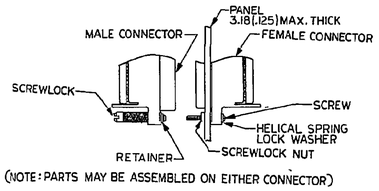

(NOTE: PARTS MAY BE ASSEMBLED ON EITHER CONNECTOR)

SCREWLOCK ASSEMBLY
1437012-1, (609-001 REF)
STAINLESS STEEL, PASSIVATED

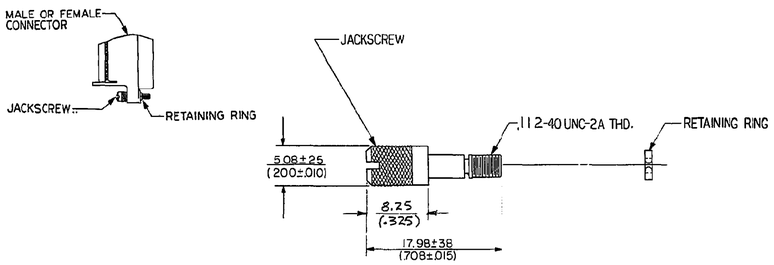

JACKSCREW ASSEMBLY
1437012-5 (609-002 REF)
STAINLESS STEEL, PASSIVATED

MATES WITH: 1-1437012-0
2-1437012-4
2-1437012-8

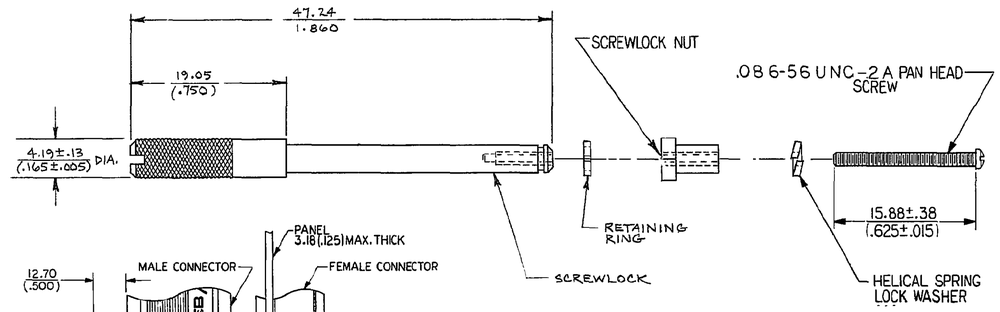

OBSOLETE

BACKSHELL SCREWLOCK ASSEMBLY
2-1437012-1 (609-005 REF)
STAINLESS STEEL, PASSIVATED

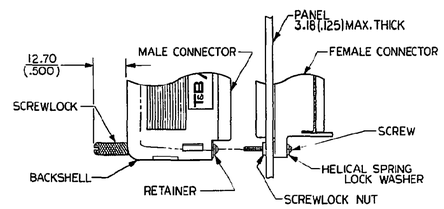

(NOTE: PARTS MAY BE MOUNTED ON EITHER CONNECTOR)

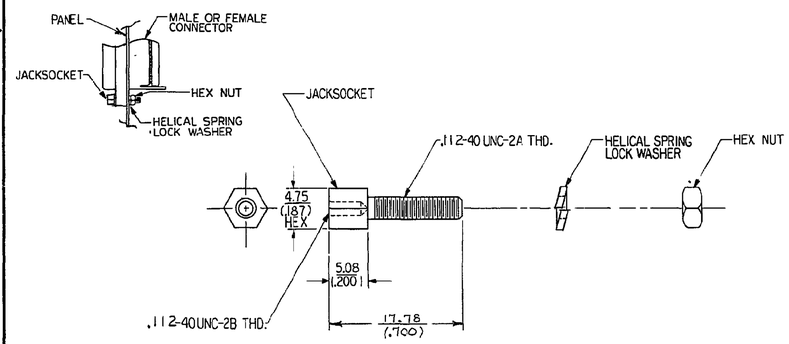

FRONT PANEL MOUNT JACKSOCKET ASSEMBLY
1-1437012-0 (609-003 REF)
STAINLESS STEEL, PASSIVATED

MATES WITH: 1437012-5 AND 1-1437012-6

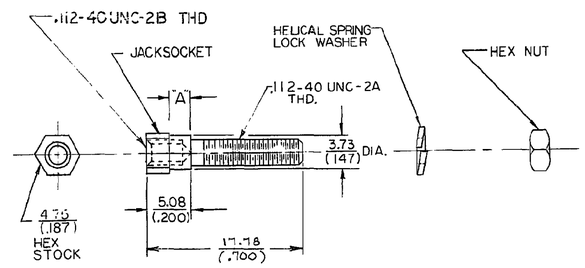

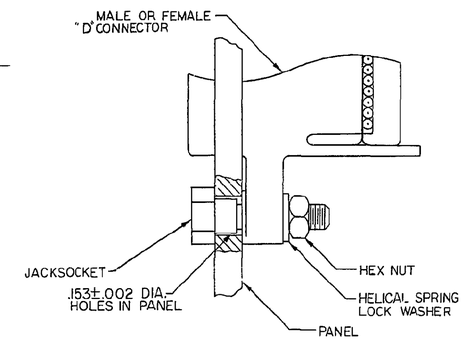

(PLASTIC CONNECTOR SHOWN)

REAR PANEL MOUNT JACKSOCKET ASSEMBLY	
TYCO #	T & B # REF
2-1437012-4	609-006-1
2-1437012-8	609-007-1
STAINLESS STEEL, PASSIVATED	

MATES WITH: 1437012-5 AND 1-1437012-6

CAT #'S	"A"	PANEL THICKNESS	USED WTH
2-1437012-8	2.16 [.085]	2.36 — 3.18 [.093]—[.120]	PLASTIC OR METAL SHELL CONNECTOR
2-1437012-4	1.27 [.050]	1.57 [.062]	PLASTIC OR METAL SHELL CONNECTOR

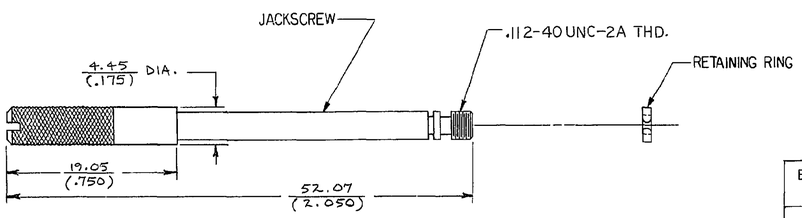

OBSOLETE

BACKSHELL JACKSCREW ASSEMBLY
1-1437012-6 (609-004 REF)
STAINLESS STEEL, PASSIVATED

MATES WITH: 1-1437012-0
2-1437012-4
2-1437012-8

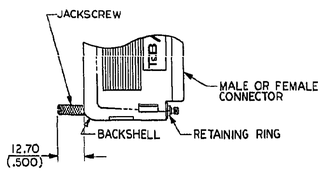

REV	REVISION RECORD	DATE	DWN	APVD
O	REVISED PER ECN 0513-0094-05	20-Jul-06	JDP	CWR

FIND NO.	QTY REQD	CODE IDENT	PART NO.	DESCRIPTION	ZONE

LIST OF MATERIALS

THIRD ANGLE PROJECTION

NEXT ASSY | USED ON

APPLICATION

UNLESS OTHERWISE SPECIFIED, DIMENSIONS ARE IN MM'S (INCHES)
TOLERANCES —
FRACTIONS ±
ANGLES — ±
DECIMALS
.XX (.XXX) ±
.X (.XX) ±

MATERIAL

DRAWN		
CHECKED		
APPROVED	/ /	
	/ /	
	/ /	
APPROVED	/ /	
APPROVED	/ /	

TITLE
D CONNECTOR
MOUNTING ACCESSORY HARDWARE

SIZE	CODE IDENT NO.	NUMBER	REV.
D	15912	1437012-1	

SCALE NTS | SHEET 1 OF 1

DIETERICH-POST CLEARPRINT 1020