molex
one company › a world of innovation

This document was generated on 03/02/2015

PLEASE CHECK WWW.MOLEX.COM FOR LATEST PART INFORMATION

Part Number: 35746-0310
Status: Active
Overview: VersaBlade™ Wire-to-Wire Connector System
Description: VersaBlade™ .070 Female Crimp Terminal, 18+18, 20+20 AWG, Type A

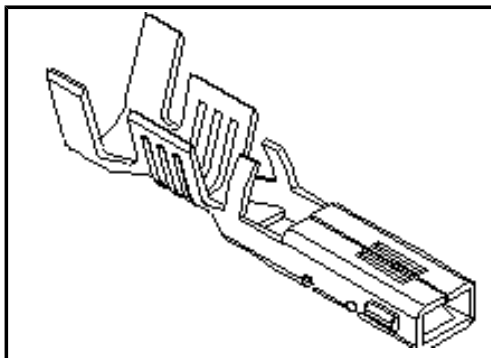

Series

image - Reference only

Documents:

3D Model
Drawing (PDF)
Product Specification PS-35150-001 (PDF)
Product Specification PS-35182-003 (PDF)
Packaging Specification PK-35151-002 (PDF)
RoHS Certificate of Compliance (PDF)

General

Product Family	Crimp Terminals
Series	35746
Application	Power
Crimp Quality Equipment	Yes
Overview	VersaBlade™ Wire-to-Wire Connector System
Product Name	VersaBlade™
UPC	800754378482

Physical

Gender	Female
Material - Metal	Phosphor Bronze
Material - Plating Mating	Tin
Material - Plating Termination	Tin
Net Weight	0.346/g
Packaging Type	Reel
Plating min - Mating	0.813µm
Plating min - Termination	0.813µm
Termination Interface: Style	Crimp or Compression
Wire Insulation Diameter	6.00mm max.
Wire Size AWG	18+18, 20+20
Wire Size mm²	N/A

Material Info

Reference - Drawing Numbers

Packaging Specification	PK-35151-002
Product Specification	PS-35150-001, PS-35182-003
Sales Drawing	SD-35746-003

EU RoHS
ELV and RoHS Compliant
REACH SVHC
Contains SVHC: No
Low-Halogen Status
Low-Halogen

China RoHS

Need more information on product environmental compliance?

Email productcompliance@molex.com
For a multiple part number RoHS Certificate of Compliance, click here

Please visit the Contact Us section for any non-product compliance questions.

Search Parts in this Series
35746Series

Mates With
35745 Crimp Terminal

Use With
35150 VersaBlade™ Hybrid Receptacle Housing. 35151 VersaBlade™ Hybrid Plug Housing

Application Tooling | **FAQ**

Tooling specifications and manuals are found by selecting the products below. Crimp Height Specifications are then contained in the Application Tooling Specification document.

Global

Description	Product #
Hand Crimp Tool for Industry standard 1.78mm Tab Terminals, 24-26 AWG Wire	0638196900

Hand Crimp Tool for 1.80mm-Wide Crimp Terminals	0638190700
T2 Terminator Die	0638529200
FineAdjust™ Applicator	0638629200
Extraction Tool	0638132700

This document was generated on 03/02/2015

PLEASE CHECK WWW.MOLEX.COM FOR LATEST PART INFORMATION