THIS DRAWING IS UNPUBLISHED. RELEASED FOR PUBLICATION -.- .
© COPYRIGHT - BY TYCO ELECTRONICS CORPORATION. ALL RIGHTS RESERVED.

LOC	DIST
AD	25

REVISIONS

P	LTR	DESCRIPTION	DATE	DWN	APVD
	0	RELEASE PER EC 0S12-0082-05	03JUN05	JDP	AMS

1. HOUSING MATERIAL: GLASS-FILLED POLYMER.
2. CONTACT MATERIAL: COPPER ALLOY.
3. PART NUMBER AND DATE CODE, IN THIS APPROXIMATE AREA, ON REVERSE SIDE.
4. ACTION PIN POSTS REQUIRE 1.57[.062] MINIMUM THICK PC BOARD. RECOMMENDED PC BOARD DRILLED HOLES ARE 1.15±0.025[.0453±.0010] DIAMETER WITH 0.02-0.08[.001-.003] COPPER AND 0.008[.0003] MINIMUM TIN-LEAD PLATING. FINISHED HOLE AFTER PLATING IS 0.94-1.09[.037-.043] DIAMETER.
5. CONTACT FINISH: DIN 41612 CLASS 2 IN CONTACT AREA. TIN PLATE ON POSTS.
6. TAIL LENGTH AFTER SEATING IN PC BOARD.
7. CONTACT POINT AFTER SEATED IN PC BOARD.
8. MARKING ON THIS SIDE.

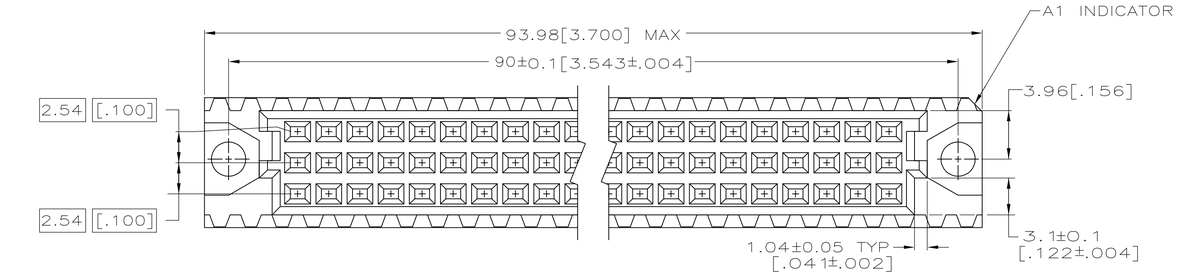

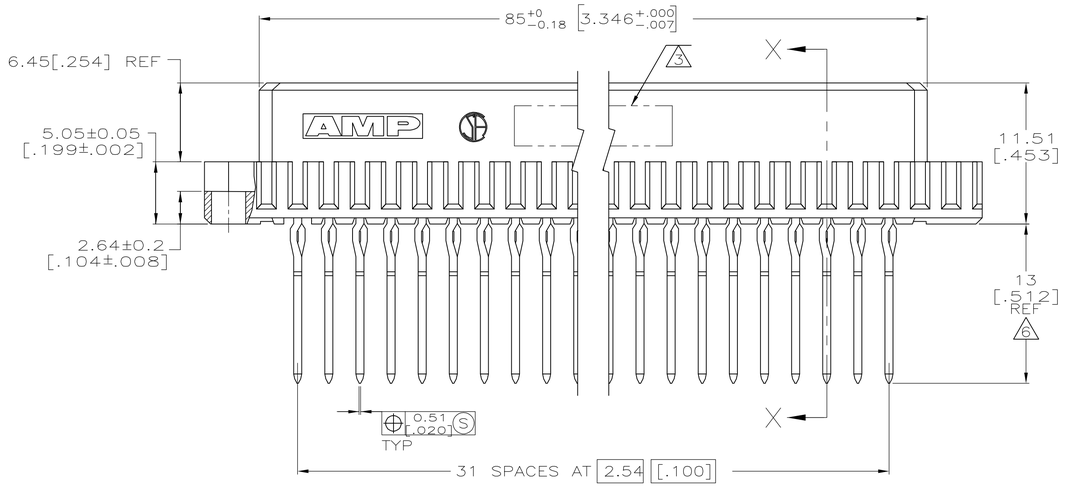

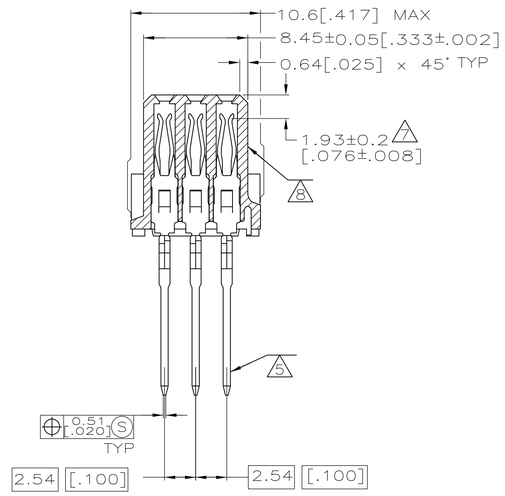

SECTION X-X

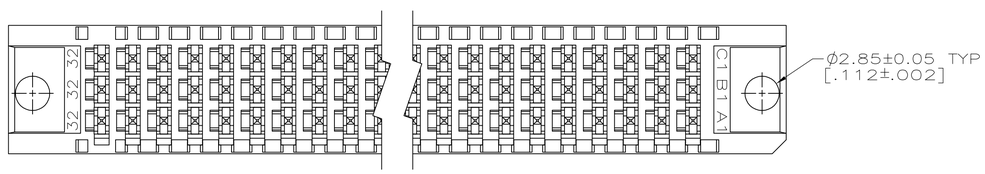

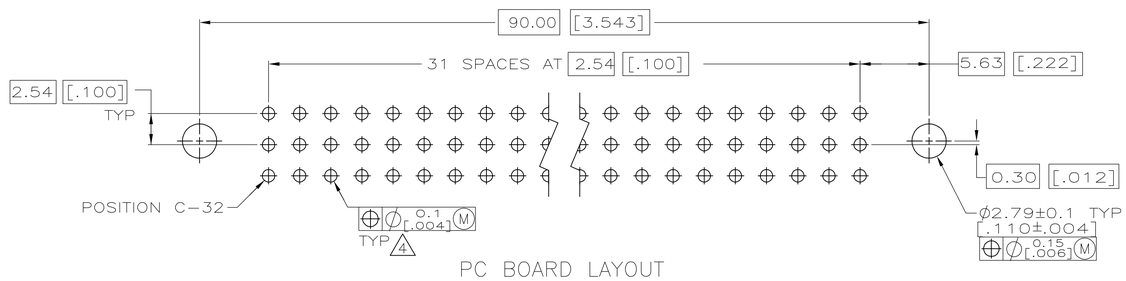

PC BOARD LAYOUT

5148057-5

PART NO

THIS DRAWING IS A CONTROLLED DOCUMENT.	DWN J. POLIGNONE 03JUN05	tyco Electronics	Tyco Electronics Corporation Harrisburg, PA 17105-3608
DIMENSIONS: mm [INCHES]	CHK A. SHARPE 03JUN05		
TOLERANCES UNLESS OTHERWISE SPECIFIED: 0 PLC ± - 1 PLC ± - 2 PLC ± 0.13[.005] 3 PLC ± - 4 PLC ± - ANGLES ± -	APVD A. SHARPE 03JUN05	NAME	ASSEMBLY, RECEPTACLE, EUROCARD, TYPE C, 96 POSITION, 14.07[.554] PRESS-FIT
	PRODUCT SPEC —		
	APPLICATION SPEC —	SIZE A1 / CAGE CODE 00779	DRAWING NO C-5148057 / RESTRICTED TO —
MATERIAL 1 2	FINISH 5	WEIGHT —	
		CUSTOMER DRAWING	SCALE 4:1 / SHEET 1 OF 1 / REV 0