FAIRCHILD SEMICONDUCTOR®

2014 年 2 月

FCP190N60_GF102

N 沟道 SuperFET® II MOSFET

600 V, 20.2 A, 199 mΩ

特性

- 650 V @ T_J = 150°C
- 典型值 $R_{DS(on)}$ = 170 mΩ
- 超低栅极电荷 （典型值 Q_g = 57 nC)
- 低有效输出电容 （典型值 $C_{oss(eff.)}$= 160 pF)
- 100% 经过雪崩测试
- 符合 RoHS 标准

应用

- LCD / LED / PDP 电视照明
- 太阳能逆变器
- AC-DC 电源

说明

SuperFET® II MOSFET 是飞兆半导体新一代利用电荷平衡技术实现出色低导通电阻和更低栅极电荷性能的高压超级结 (SJ) MOSFET 系列产品。这项技术专用于最小化导通损耗并提供卓越的开关性能、 dv/dt 额定值和更高雪崩能量。因此， SuperFET MOSFET 非常适合开关电源应用，如功率因数校正 (PFC)、服务器 / 电信电源、平板电视电源、 ATX 电源及工业电源应用。

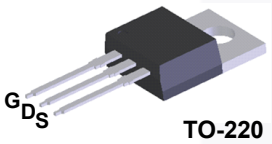

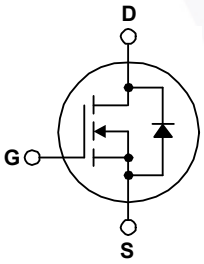

绝对最大额定值 T_C = 25°C 除非另有说明。

符号	参数		FCP190N60_GF102	单位
V_{DSS}	漏极－源极电压		600	V
V_{GSS}	栅极－源极电压	- DC	±20	V
		- AC (f > 1 Hz)	±30	
I_D	漏极电流	- 连续 (T_C = 25°C)	20.2	A
		- 连续 (T_C = 100°C)	12.7	
I_{DM}	漏极电流	- 脉冲 （说明 1）	60.6	A
E_{AS}	单脉冲雪崩能量	（说明 2）	400	mJ
I_{AR}	雪崩电流	（说明 1）	4.0	A
E_{AR}	重复雪崩能量	（说明 1）	2.1	mJ
dv/dt	MOSFET dv/dt		100	V/ns
	二极管恢复 dv/dt 峰值	（说明 3）	20	
P_D	功耗	(T_C = 25°C)	208	W
		- 降低至 25°C 以上	1.67	W/°C
T_J, T_{STG}	工作和存储温度范围		-55 至 +150	°C
T_L	用于焊接的最大引线温度，距离外壳 1/8"，持续 5 秒		300	°C

热性能

符号	参数	FCP190N60_GF102	单位
$R_{\theta JC}$	结至外壳热阻最大值	0.6	°C/W
$R_{\theta JA}$	结至环境热阻最大值	62.5	

© 2013 飞兆半导体公司

封装标识与定购信息

器件编号	顶标	封装	包装方法	卷尺寸	带宽	数量
FCP190N60_GF102	FCP190N60 GF102	TO-220	塑料管	不适用	不适用	50 个

电气特性 T_C = 25°C 除非另有说明。

符号	参数	测试条件	最小值	典型值	最大值	单位
关断特性						
BV_{DSS}	漏极一源极击穿电压	V_{GS} = 0 V, I_D = 10 mA, T_J = 25°C	600	-	-	V
		V_{GS} = 0 V, I_D = 10 mA, T_J = 150°C	650	-	-	
ΔBV_{DSS} / ΔT_J	击穿电压温度系数	I_D=10 mA，参考条件为 25°C	-	0.67	-	V/°C
BV_{DS}	漏极 - 源极雪崩击穿电压	V_{GS} = 0 V, I_D = 20 A	-	700	-	V
I_{DSS}	零栅极电压漏极电流	V_{DS} = 480 V, V_{GS} = 0 V	-	-	1	μA
		V_{DS} = 480 V, T_C = 125°C	-	-	10	
I_{GSS}	栅极 - 体漏电流	V_{GS} = ±20 V, V_{DS} = 0 V	-	-	±100	nA
导通特性						
$V_{GS(th)}$	栅极阈值电压	V_{GS} = V_{DS}, I_D = 250 μA	2.5	-	3.5	V
$R_{DS(on)}$	漏极至源极静态导通电阻	V_{GS} = 10 V, I_D = 10 A	-	0.17	0.199	Ω
g_{FS}	正向跨导	V_{DS} = 20 V, I_D = 10 A	-	21	-	S
动态特性						
C_{iss}	输入电容	V_{DS} = 25 V, V_{GS} = 0 V, f = 1 MHz	-	2220	2950	pF
C_{oss}	输出电容		-	1630	2165	pF
C_{rss}	反向传输电容		-	85	128	pF
C_{oss}	输出电容	V_{DS} = 380 V, V_{GS} = 0 V, f = 1 MHz	-	42	-	pF
$C_{oss(eff.)}$	有效输出电容	V_{DS} = 0 V 至 480 V, V_{GS} = 0 V	-	160	-	pF
$Q_{g(tot)}$	10 V 的栅极电荷总量	V_{DS} = 380 V, I_D = 10 A, V_{GS} = 10 V （说明 4）	-	57	74	nC
Q_{gs}	栅极 - 源极栅极电荷		-	9	-	nC
Q_{gd}	栅极 - 漏极 " 米勒 " 电荷		-	21	-	nC
ESR	等效串联电阻	f = 1 MHz	-	1	-	Ω
开关特性						
$t_{d(on)}$	导通延迟时间	V_{DD} = 380 V, I_D = 10 A, V_{GS} = 10 V, R_g = 4.7 Ω （说明 4）	-	20	50	ns
t_r	开通上升时间		-	10	30	ns
$t_{d(off)}$	关断延迟时间		-	64	138	ns
t_f	关断下降时间		-	5	20	ns
漏极 - 源极二极管特性						
I_S	漏极 - 源极二极管最大正向连续电流		-	-	20.2	A
I_{SM}	漏极 - 源极二极管最大正向脉冲电流		-	-	60.6	A
V_{SD}	漏极 - 源极二极管正向电压	V_{GS} = 0 V, I_{SD} = 10 A	-	-	1.2	V
t_{rr}	反向恢复时间	V_{GS} = 0 V, I_{SD} = 10 A, dI_F/dt = 100 A/μs	-	280	-	ns
Q_{rr}	反向恢复电荷		-	3.8	-	μC

注意：

1. 重复额定值：脉冲宽度受限于最大结温。
2. I_{AS} = 4 A， V_{DD} = 50 V， R_G = 25 Ω，启动 T_J = 25°C。
3. I_{SD} ≤ 10 A， di/dt ≤ 200 A/μs， V_{DD} ≤ BV_{DSS}，启动 T_J = 25°C。
4. 本质上独立于工作温度的典型特性。

典型性能特征

图 1. 通态区域特性

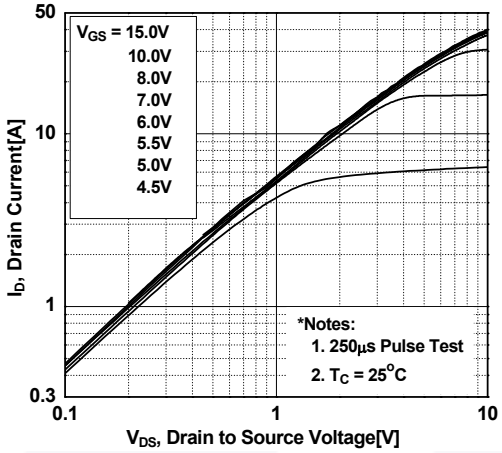

图 2. 传递特性

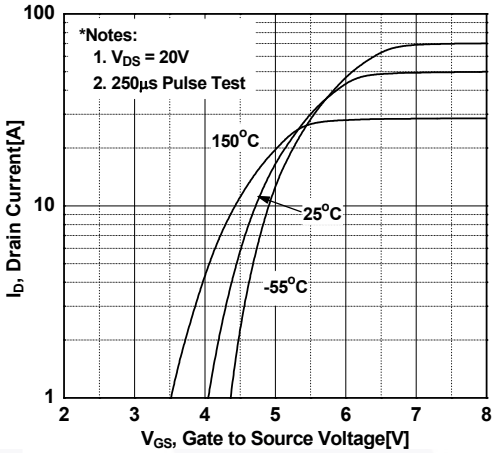

图 3. 导通电阻变化与漏极电流和栅极电压

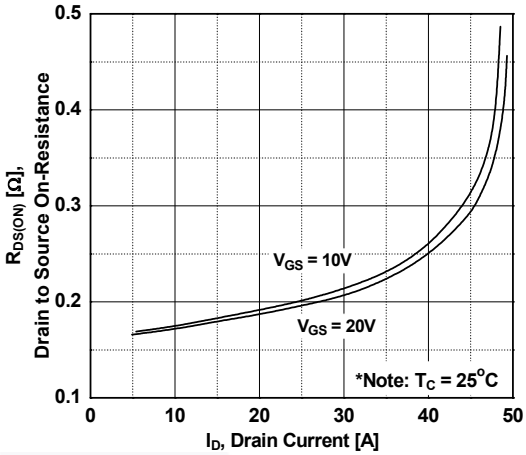

图 4. 体二极管正向电压变化与源极电流和温度

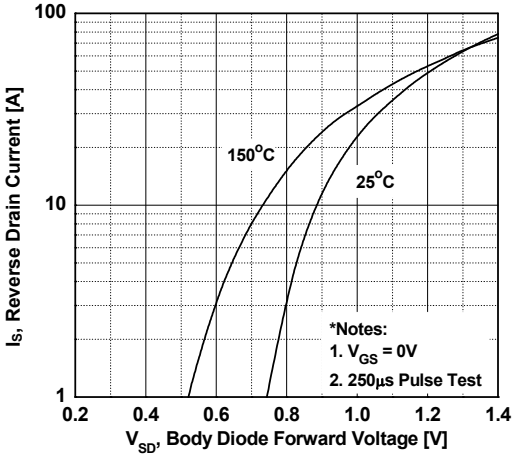

图 5. 电容特性

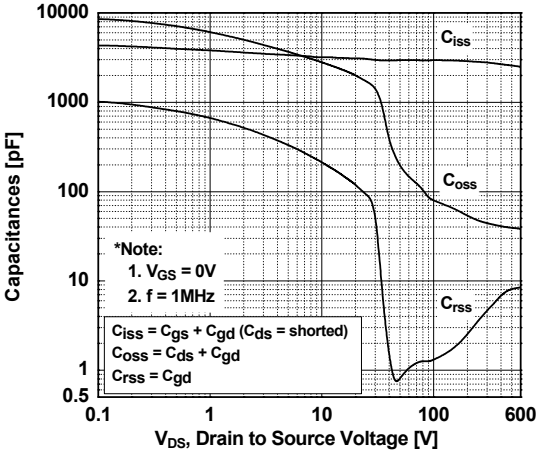

图 6. 栅极电荷特性

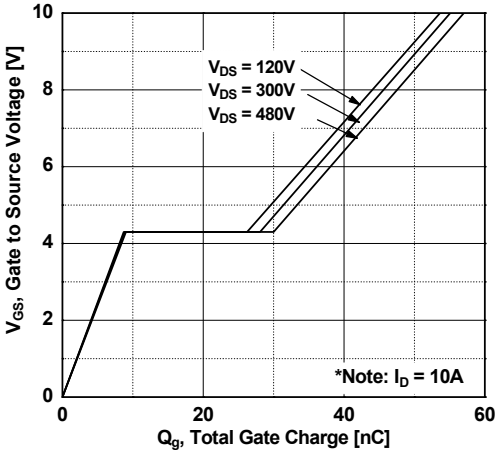

典型性能特征 （接上页）

图 7. 击穿电压变化与温度的关系

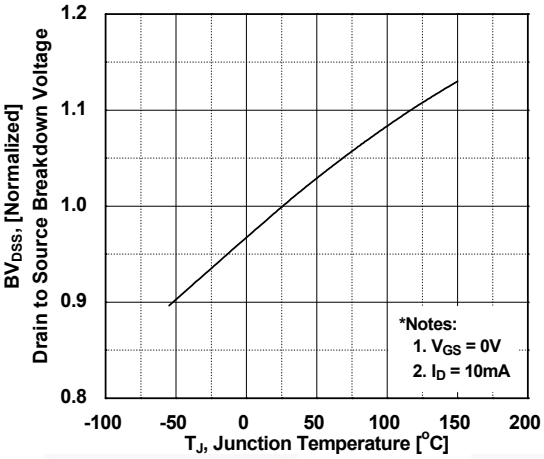

图 8. 导通电阻变化与温度的关系

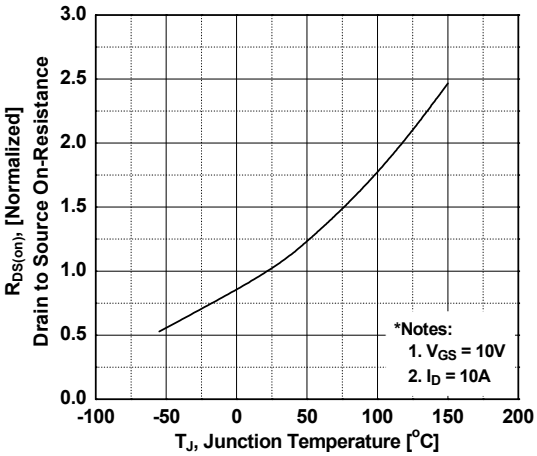

图 9. 最大安全工作区

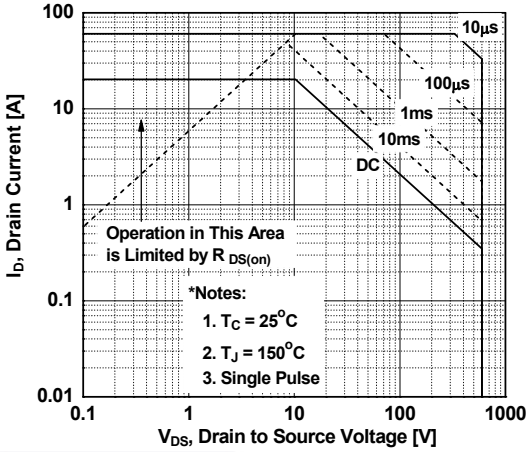

图 10. 最大漏极电流与壳体温度的关系

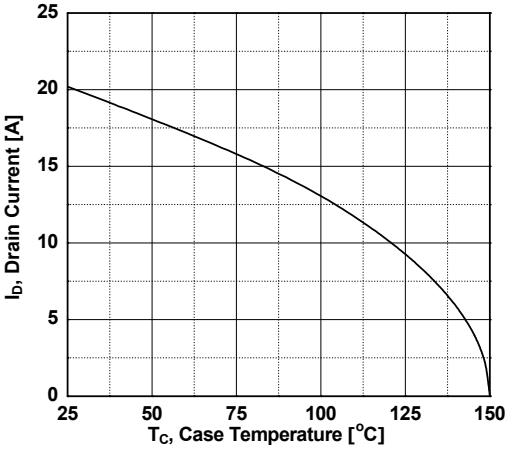

图 11. Eoss 与漏极 - 源极电压的关系

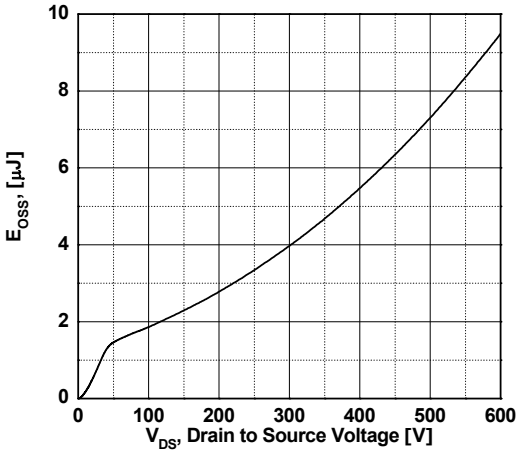

典型性能特征（接上页）

图 12. 瞬态热响应曲线

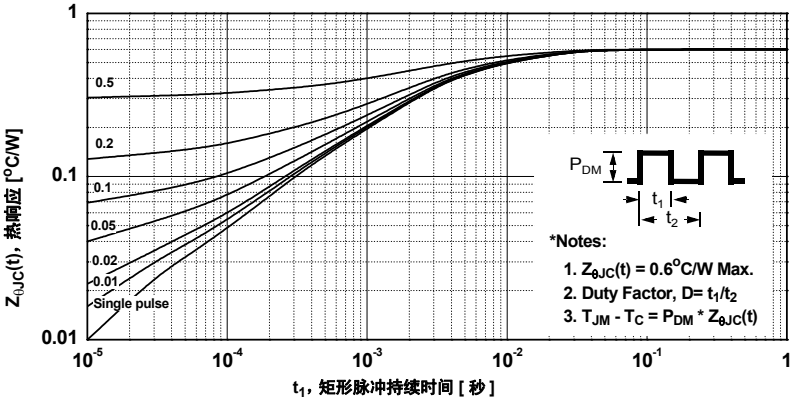

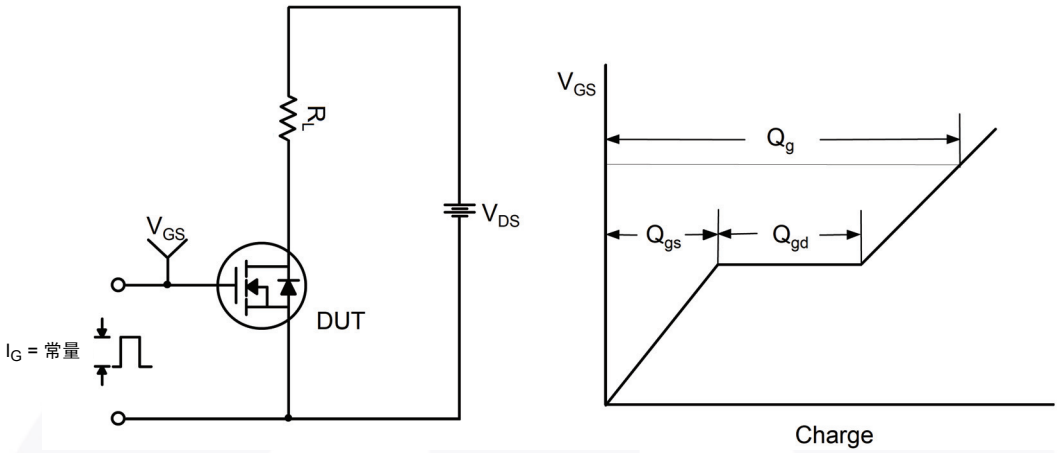

图 13. 栅极电荷测试电路与波形

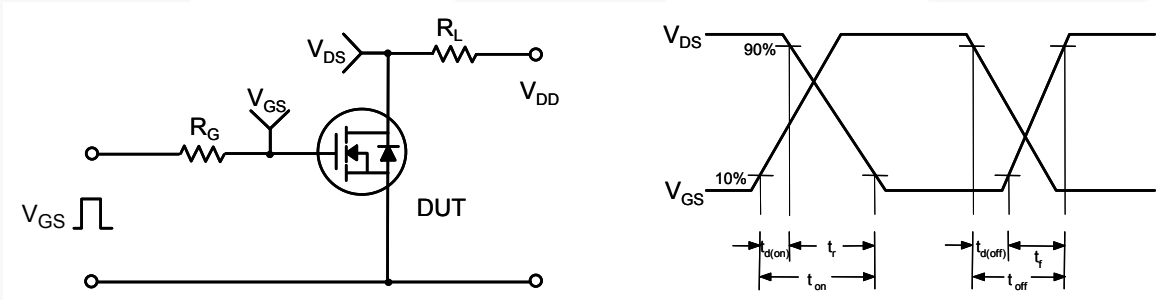

图 14. 阻性开关测试电路与波形

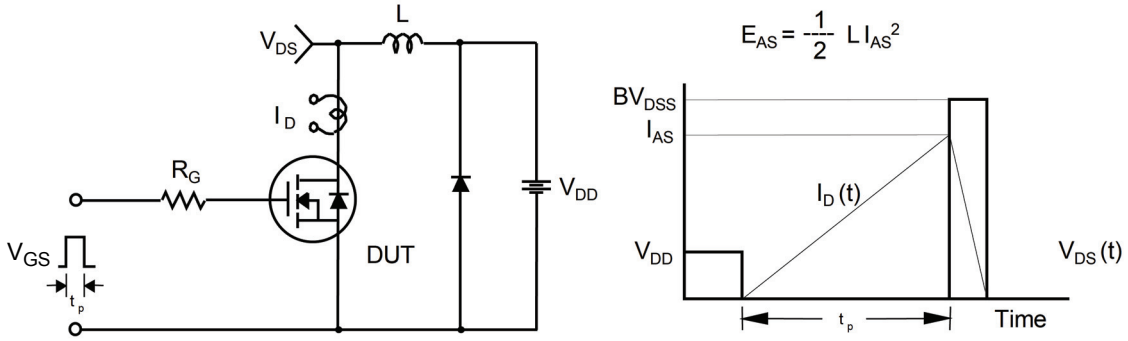

图 15. 非箝位电感开关测试电路与波形

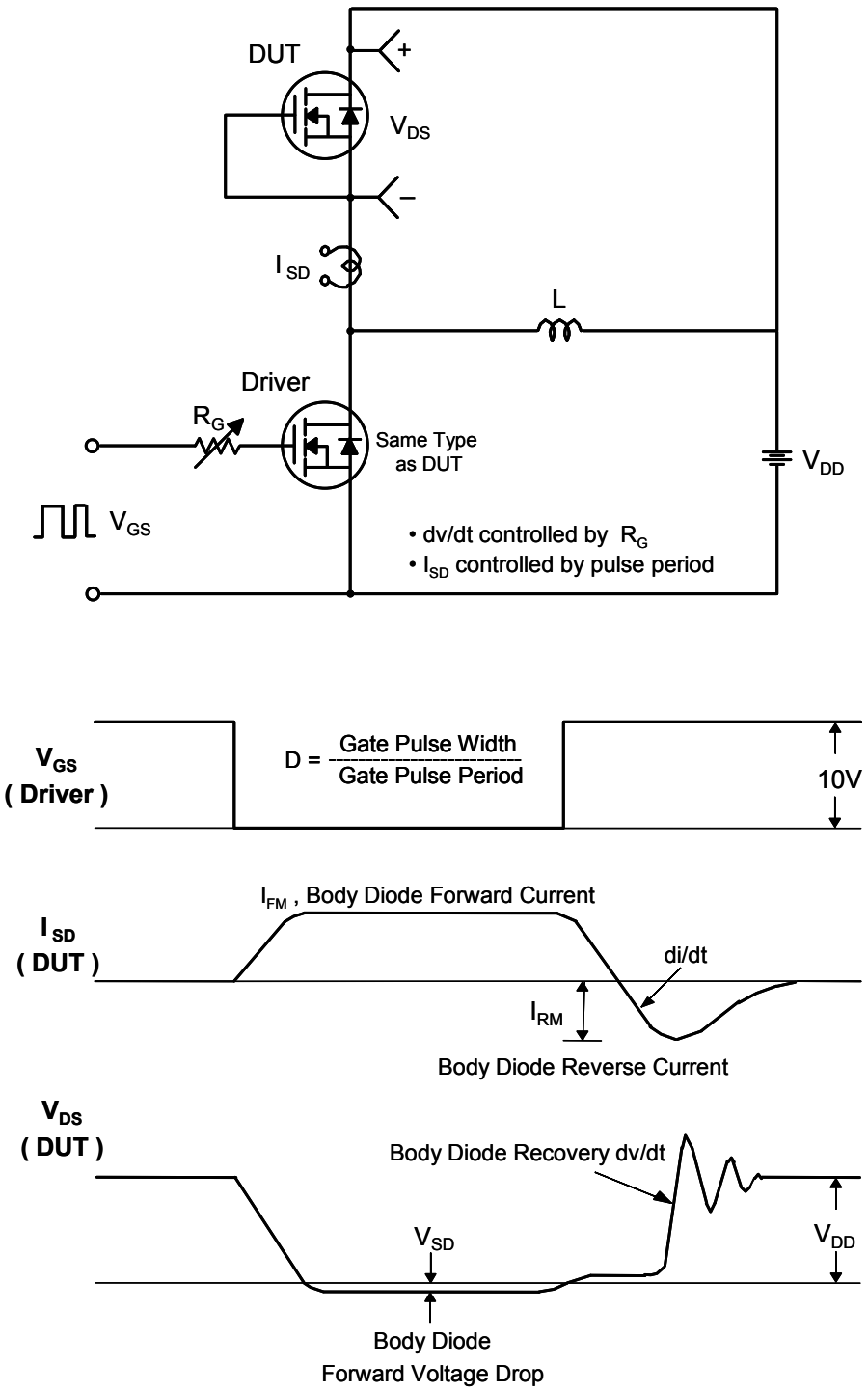

图 16. 二极管恢复 dv/dt 峰值测试电路与波形

机械尺寸

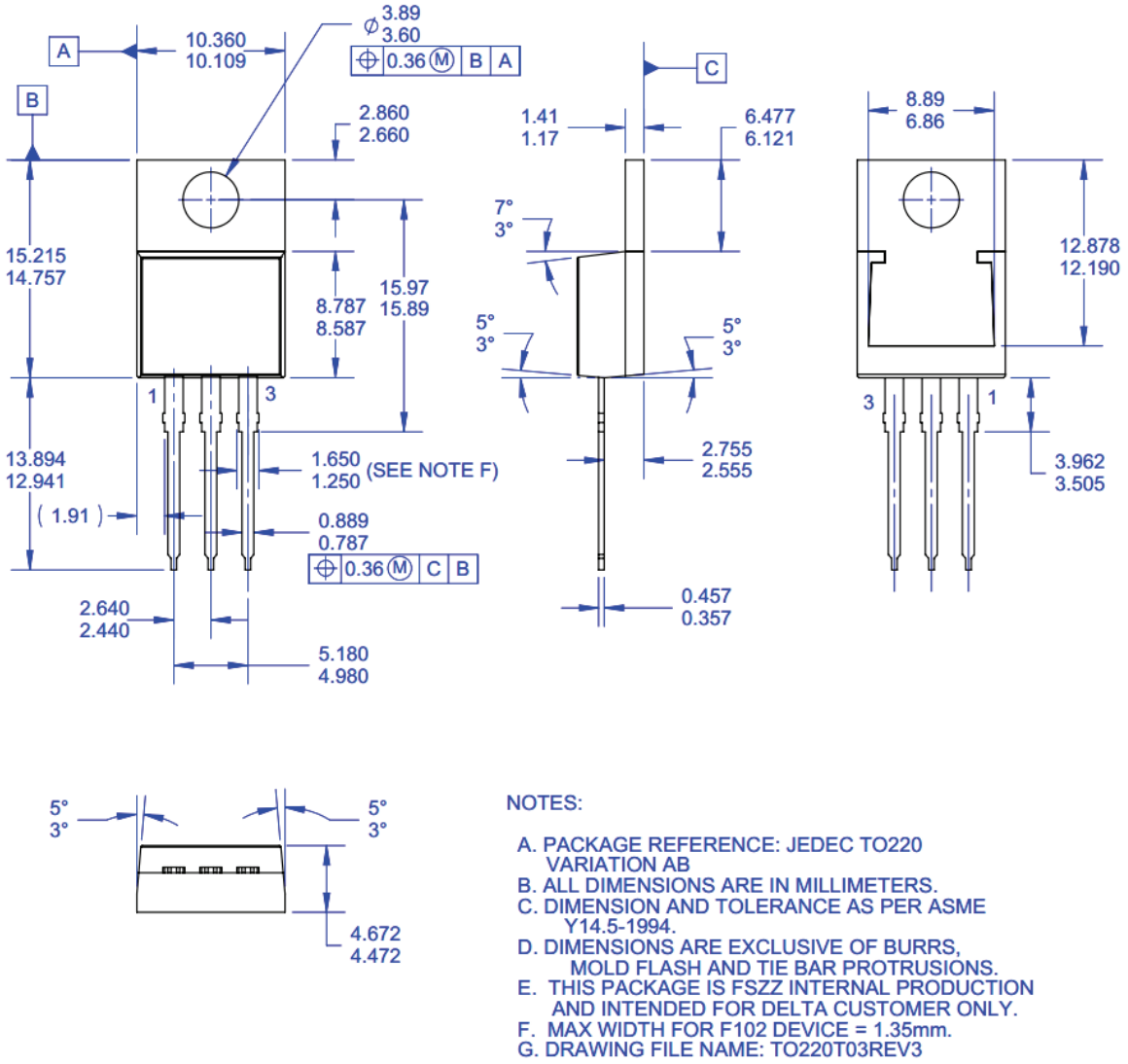

图 17. TO-220，模塑， 3 引脚， Jedec 变体 AB (Δ)

封装图纸作为一项服务，提供给考虑飞兆半导体元件的客户。具体参数可能会有变化，且不会做出相应通知。请注意图纸上的版本和 / 或日期，并联系飞兆半导体代表核实或获得最新版本。封装规格并不扩大飞兆公司全球范围内的条款与条件，尤其是其中涉及飞兆公司产品保修的部分。

随时访问飞兆半导体在线封装网页，可以获取最新的封装图纸：

http://www.fairchildsemi.com/package/packageDetails.html?id=PN_TT220-0I3

FAIRCHILD SEMICONDUCTOR®

TRADEMARKS

The following includes registered and unregistered trademarks and service marks, owned by Fairchild Semiconductor and/or its global subsidiaries, and is not intended to be an exhaustive list of all such trademarks.

AccuPower™
AX-CAP®*
BitSiC™
Build it Now™
CorePLUS™
CorePOWER™
CROSSVOLT™
CTL™
Current Transfer Logic™
DEUXPEED®
Dual Cool™
EcoSPARK®
EfficentMax™
ESBC™
F®
Fairchild®
Fairchild Semiconductor®
FACT Quiet Series™
FACT®
FAST®
FastvCore™
FETBench™
FPS™
F-PFS™
FRFET®
Global Power Resource℠
GreenBridge™
Green FPS™
Green FPS™ e-Series™
G*max*™
GTO™
IntelliMAX™
ISOPLANAR™
Marking Small Speakers Sound Louder and Better™
MegaBuck™
MICROCOUPLER™
MicroFET™
MicroPak™
MicroPak2™
MillerDrive™
MotionMax™
mWSaver®
OptoHiT™
OPTOLOGIC®
OPTOPLANAR®
®
PowerTrench®
PowerXS™
Programmable Active Droop™
QFET®
QS™
Quiet Series™
RapidConfigure™
™
Saving our world, 1mW/W/kW at a time™
SignalWise™
SmartMax™
SMART START™
Solutions for Your Success™
SPM®
STEALTH™
SuperFET®
SuperSOT™-3
SuperSOT™-6
SuperSOT™-8
SupreMOS®
SyncFET™
Sync-Lock™
SYSTEM GENERAL ®*
TinyBoost®
TinyBuck®
TinyCalc™
TinyLogic®
TINYOPTO™
TinyPower™
TinyPWM™
TinyWire™
TranSiC™
TriFault Detect™
TRUECURRENT®*
µSerDes™
µSerDes™
UHC®
Ultra FRFET™
UniFET™
VCX™
VisualMax™
VoltagePlus™
XS™

*Trademarks of System General Corporation, used under license by Fairchild Semiconductor.

DISCLAIMER

FAIRCHILD SEMICONDUCTOR RESERVES THE RIGHT TO MAKE CHANGES WITHOUT FURTHER NOTICE TO ANY PRODUCTS HEREIN TO IMPROVE RELIABILITY, FUNCTION, OR DESIGN. FAIRCHILD DOES NOT ASSUME ANY LIABILITY ARISING OUT OF THE APPLICATION OR USE OF ANY PRODUCT OR CIRCUIT DESCRIBED HEREIN; NEITHER DOES IT CONVEY ANY LICENSE UNDER ITS PATENT RIGHTS, NOR THE RIGHTS OF OTHERS. THESE SPECIFICATIONS DO NOT EXPAND THE TERMS OF FAIRCHILD'S WORLDWIDE TERMS AND CONDITIONS, SPECIFICALLY THE WARRANTY THEREIN, WHICH COVERS THESE PRODUCTS.

LIFE SUPPORT POLICY

FAIRCHILD'S PRODUCTS ARE NOT AUTHORIZED FOR USE AS CRITICAL COMPONENTS IN LIFE SUPPORT DEVICES OR SYSTEMS WITHOUT THE EXPRESS WRITTEN APPROVAL OF FAIRCHILD SEMICONDUCTOR CORPORATION.

As used here in:

1. Life support devices or systems are devices or systems which, (a) are intended for surgical implant into the body or (b) support or sustain life, and (c) whose failure to perform when properly used in accordance with instructions for use provided in the labeling, can be reasonably expected to result in a significant injury of the user.
2. A critical component in any component of a life support, device, or system whose failure to perform can be reasonably expected to cause the failure of the life support device or system, or to affect its safety or effectiveness.

ANTI-COUNTERFEITING POLICY

Fairchild Semiconductor Corporation's Anti-Counterfeiting Policy. Fairchild's Anti-Counterfeiting Policy is also stated on our external website, www.Fairchildsemi.com, under Sales Support.

Counterfeiting of semiconductor parts is a growing problem in the industry. All manufactures of semiconductor products are experiencing counterfeiting of their parts. Customers who inadvertently purchase counterfeit parts experience many problems such as loss of brand reputation, substandard performance, failed application, and increased cost of production and manufacturing delays. Fairchild is taking strong measures to protect ourselves and our customers from the proliferation of counterfeit parts. Fairchild strongly encourages customers to purchase Fairchild parts either directly from Fairchild or from Authorized Fairchild Distributors who are listed by country on our web page cited above. Products customers buy either from Fairchild directly or from Authorized Fairchild Distributors are genuine parts, have full traceability, meet Fairchild's quality standards for handing and storage and provide access to Fairchild's full range of up-to-date technical and product information. Fairchild and our Authorized Distributors will stand behind all warranties and will appropriately address and warranty issues that may arise. Fairchild will not provide any warranty coverage or other assistance for parts bought from Unauthorized Sources. Fairchild is committed to combat this global problem and encourage our customers to do their part in stopping this practice by buying direct or from authorized distributors.

PRODUCT STATUS DEFINITIONS

Definition of Terms

Datasheet Identification	Product Status	Definition
Advance Information	Formative / In Design	Datasheet contains the design specifications for product development. Specifications may change in any manner without notice.
Preliminary	First Production	Datasheet contains preliminary data; supplementary data will be published at a later date. Fairchild Semiconductor reserves the right to make changes at any time without notice to improve design.
No Identification Needed	Full Production	Datasheet contains final specifications. Fairchild Semiconductor reserves the right to make changes at any time without notice to improve the design.
Obsolete	Not In Production	Datasheet contains specifications on a product that is discontinued by Fairchild Semiconductor. The datasheet is for reference information only.

Rev. I66