THIS DRAWING IS UNPUBLISHED. RELEASED FOR PUBLICATION 20
© COPYRIGHT 20 BY TYCO ELECTRONICS CORPORATION. ALL RIGHTS RESERVED.

LOC	DIST
-	-

REVISIONS

P	LTR	DESCRIPTION	DATE	DWN	APVD
	A	REVISED PER ECO-09-020590	08SEP2009	SS	MS
	B	REVISED PER ECO-10-019216	23SEP2010	KT	JE
	C	REVISED PER ECO-10-019216	27SEO2010	KT	JE

1. MATERIAL: POLYCARBONATE, UL 94, UV PROTECTED, BLACK

2. FOR INSTALLATION AND EXTRACTION SOLARLOK CONNECTORS FLAT BLADE SCREWDRIVER TIP WIDTH MUST NOT EXCEED 3.75.

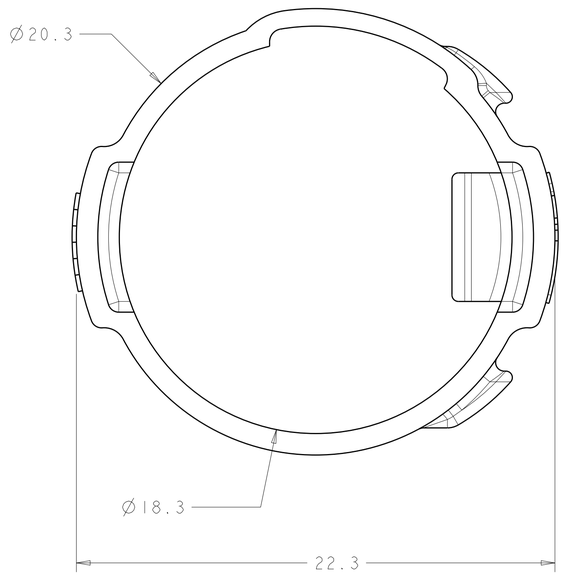

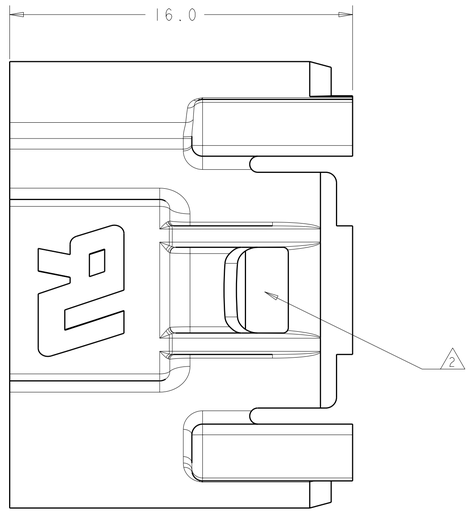

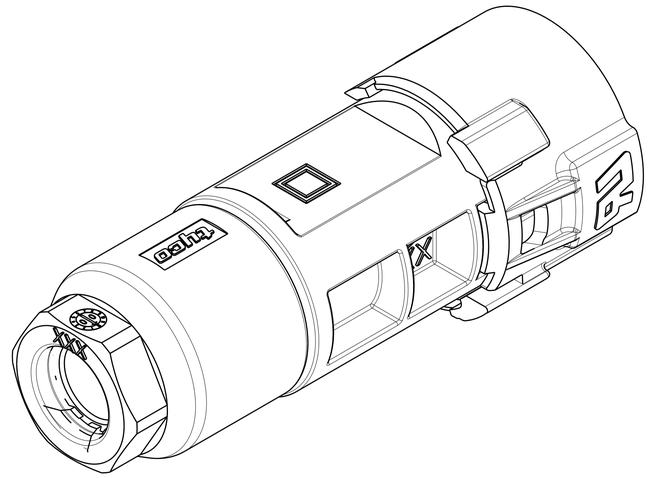

SCALE 4:1

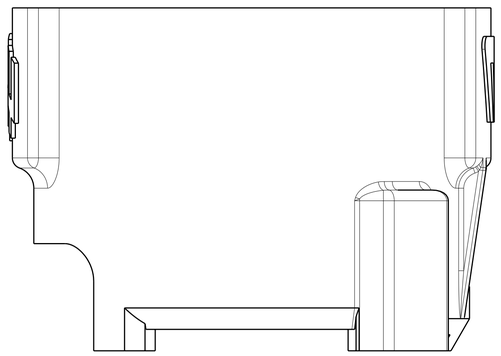

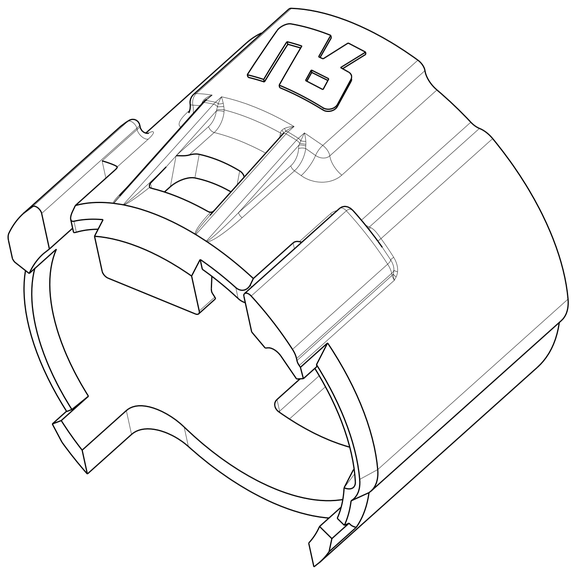

THIS DRAWING IS A CONTROLLED DOCUMENT FOR TYCO ELECTRONICS CORPORATION. IT IS SUBJECT TO CHANGE AND THE CONTROLLING ENGINEERING ORGANIZATION SHOULD BE CONTACTED FOR THE LATEST REVISION.

DIMENSIONS: mm

TOLERANCES UNLESS OTHERWISE SPECIFIED:
0 PLC ±-
1 PLC ±0.2
2 PLC ±0.13
3 PLC ±-
4 PLC ±-
ANGLES ±-

MATERIAL: 1

FINISH: - -

DWN	PDR	06/24/09
CHK	PDR	06/24/09
APVD	PDR	06/24/09

PRODUCT SPEC: -
APPLICATION SPEC: -
WEIGHT: -

Tyco Electronics
Tyco Electronics
Harrisburg, PA 17105-3608

NAME: SOLARLOK LOCKING COLLAR

SIZE	CAGE CODE	DRAWING NO	RESTRICTED TO
A1	00779	C-2106207	-

CUSTOMER DRAWING | SCALE 4:1 | SHEET 1 OF 1 | REV C

AMP 4805 REV 31MAR2000

Pro/ENGINEER DRAWING