THIS DRAWING IS UNPUBLISHED. RELEASED FOR PUBLICATION -,- .
© COPYRIGHT - By - ALL RIGHTS RESERVED.

LOC	DIST
—	—

REVISIONS

P	LTR	DESCRIPTION	DATE	DWN	APVD
	H3	NEW DRAWING PER ECO-11-019045	03APR12	KH	DR

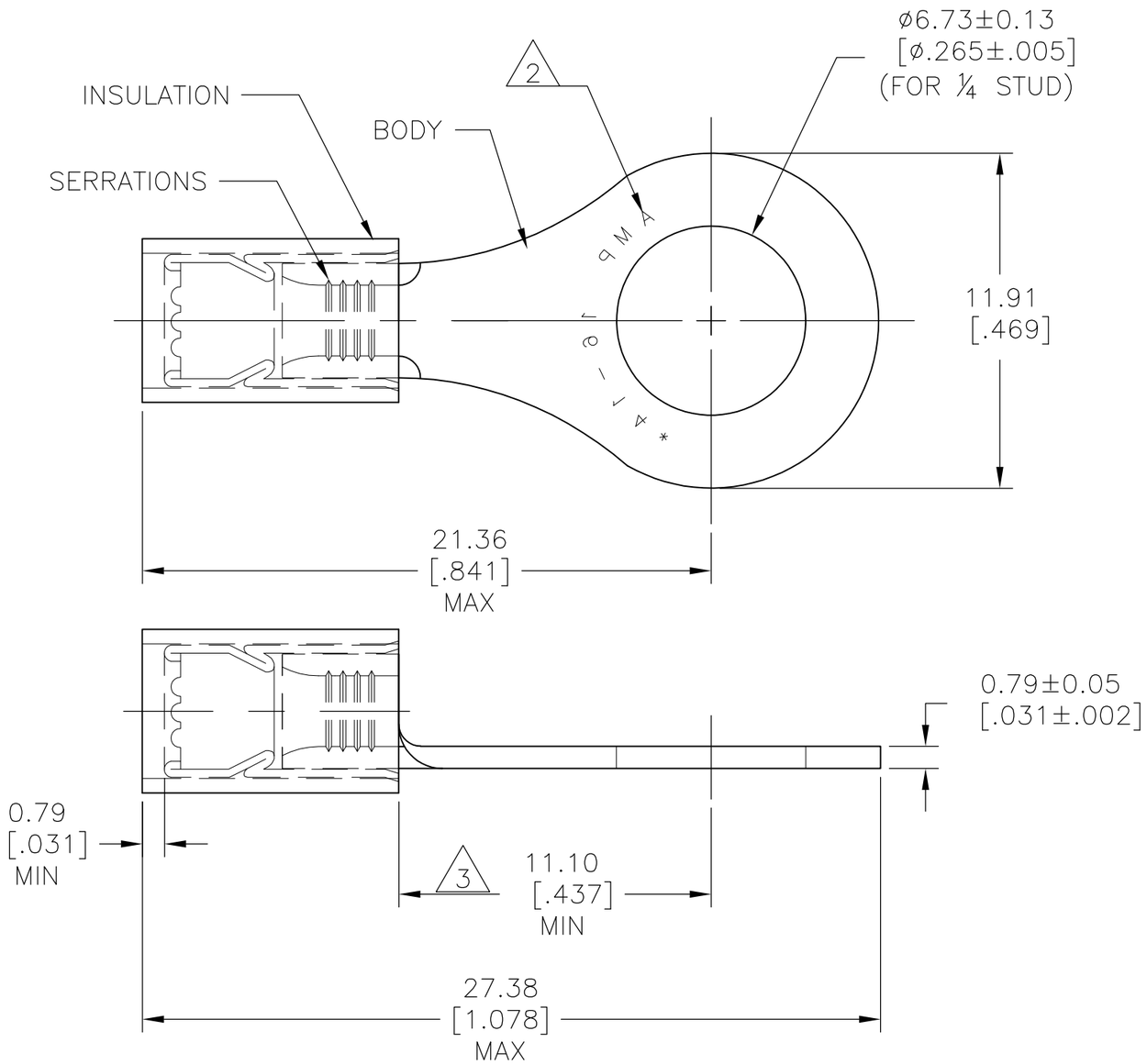

AMP WIRE RANGE	UL Listed FILE E13288
16-14 AWG SOLID OR STRANDED	16-14 AWG SOLID OR STRANDED

1 FOR 2.92[.115] TO 4.32[.170] WIRE INSULATION DIA

2 STAMP AMP 16-14* APPROX AS SHOWN,

3 DIMENSION APPLIES FROM EDGE OF METAL WIRE BARREL TO CENTER OF STUD HOLE.

4 MATERIAL: BODY & SLEEVE: COPPER PER ASTM B152.
INSULATION : NYLON

5 FINISH: BODY & SLEEVE: TIN PLATE PER ASTM B545.
INSULATION: COLOR-BLUE.

QTY	PACKAGE TYPE	PART NO
100	LOOSE PC, BOX	8-321045-1
4000	TAPE REEL	2-321045-1
1000	LOOSE PC,	321045

AMP INCORPORATED
CUSTOMER SERVICE SYSTEMS

FOR ADDITIONAL PRODUCT INFORMATION OR COPIES OF DRAWINGS AND TECHNICAL DOCUMENTS	PRODUCT INFORMATION CENTER 1-800-522-6752	RECOMMENDED OPERATING TEMPERATURE: 105°C [221°F]
FOR APPLICATION TOOLING INFORMATION	TOOLING ASSISTANCE CENTER 1-800-722-1111	VOLTAGE RATING: 300V MAX
FOR ORDER ENTRY	1-800-526-5142	WIRE CROSS SECTIONAL AREA RANGE: 1.04-2.62mm² [2,050-5,180] CIR.MIL SOLID OR STRANDED

THIS DRAWING IS A CONTROLLED DOCUMENT.

DIMENSIONS: mm [INCHES]

TOLERANCES UNLESS OTHERWISE SPECIFIED:
0 PLC ± -
1 PLC ± -
2 PLC ± -
3 PLC ± -
4 PLC ± -
ANGLES ± -

MATERIAL 4 FINISH 5

DWN	KIRAN HOLAL	03APR12
CHK	ROHDE DANIEL	03APR12
APVD	ROHDE DANIEL	03APR12
PRODUCT SPEC	—	
APPLICATION SPEC	—	
WEIGHT	—	

TE Connectivity

NAME: WIRE TERMINAL, RING TOUNGE P.I.D.G, 16-14 AWG

SIZE	CAGE CODE	DRAWING NO	RESTRICTED TO
A3	00779	C-321045	—

CUSTOMER DRAWING | SCALE 5:1 | SHEET 1 OF 1 | REV H3

1470-19 (3/11)