FIBOX EURONORM II PC

120 X 200 X 75

FIBOX

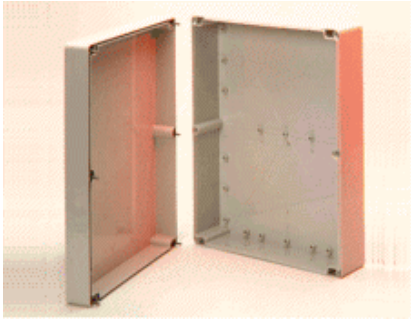

This is a sample photo.

ORDER SYMBOL: PC 122008

EL.number

Sweden: 2536125
Denmark: 8212002843
Finland: 3423438

EAN: 6418074003676

INCLUDING:

Enclosure body, cover with PUR gasket, cover screws, and mounting screws.

APPROVALS:

USA: UL Type 1, 4, 4X, 12, 13 (E75645 Vol.1 Sec.6); IK 08 (front) IK 07 (side) (IK-code EN50102); UL 94-V2

EURO: IP 67/IP 66; IK 08 (front) IK 07 (side) (IK-code EN50102); UL 94-V2

OTHERS: IEC 529, CE, EEI, FIMKO 189830-01

FIBOX EURONORM II PC

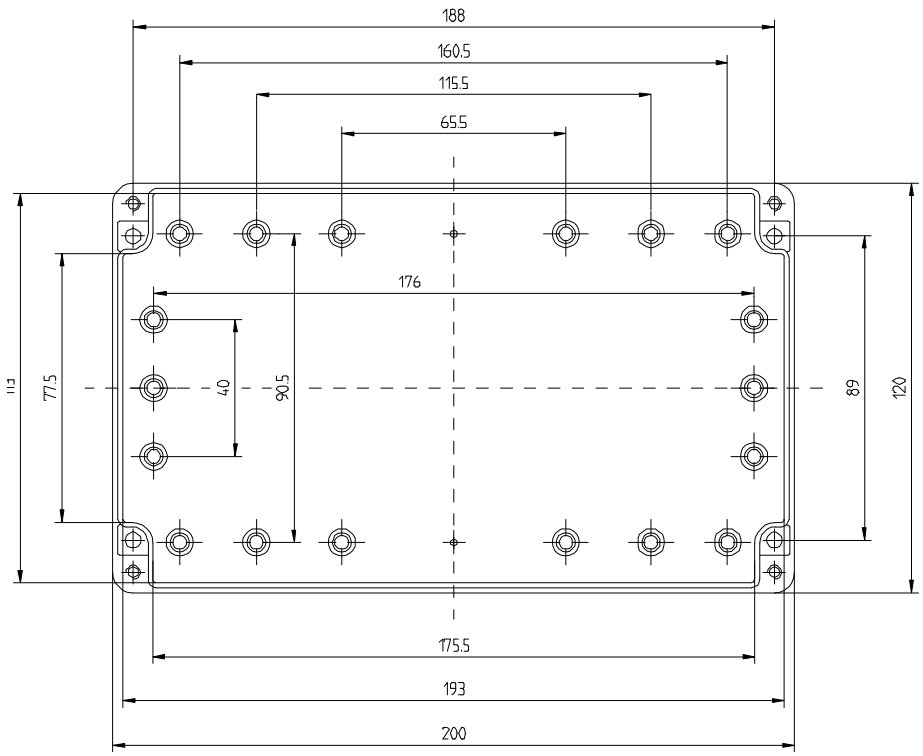

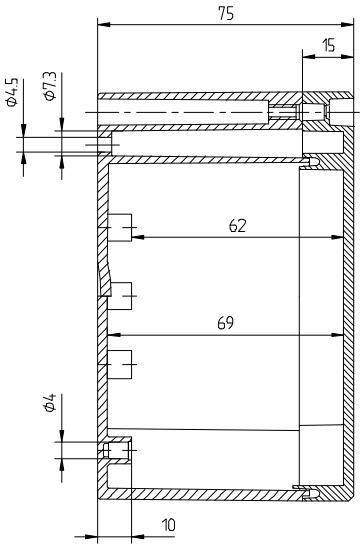

TECHNICAL INFORMATION:

Standard colour:	RAL 7035	Temp.range in cont. use:	Max. +80 °C
Ingress protection:	IP 67 (IEC 529)	Temp. range of material:	- 40 °C - + 120 °C
Flame resistance:	UL 94-V2		

ACCESSORIES

Fastening lug	TF 28037	DIN-Rail	TRM 0812
DIN-Rail	TRH 1212	DIN-Rail	TRM 0816
DIN-Rail	TRH 1216	DIN-Rail	TRM 1212
DIN-Rail	TRH 1220		
DIN-Rail	TRH 1520		
DIN-Rail	TRH 2330		
DIN-Rail	TRH 24		
DIN-Rail	TRM 0507		
DIN-Rail	TRM 0808		

(c) FIBOX Oy Data subject to change without notice.