THIS DRAWING IS UNPUBLISHED. RELEASED FOR PUBLICATION - -, .
© COPYRIGHT - By - ALL RIGHTS RESERVED.

LOC	DIST
H	—

REVISIONS

P	LTR	DESCRIPTION	DATE	DWN	APVD
	F1	REVISED PER ECO-11-005294	02APR11	RK	HMR

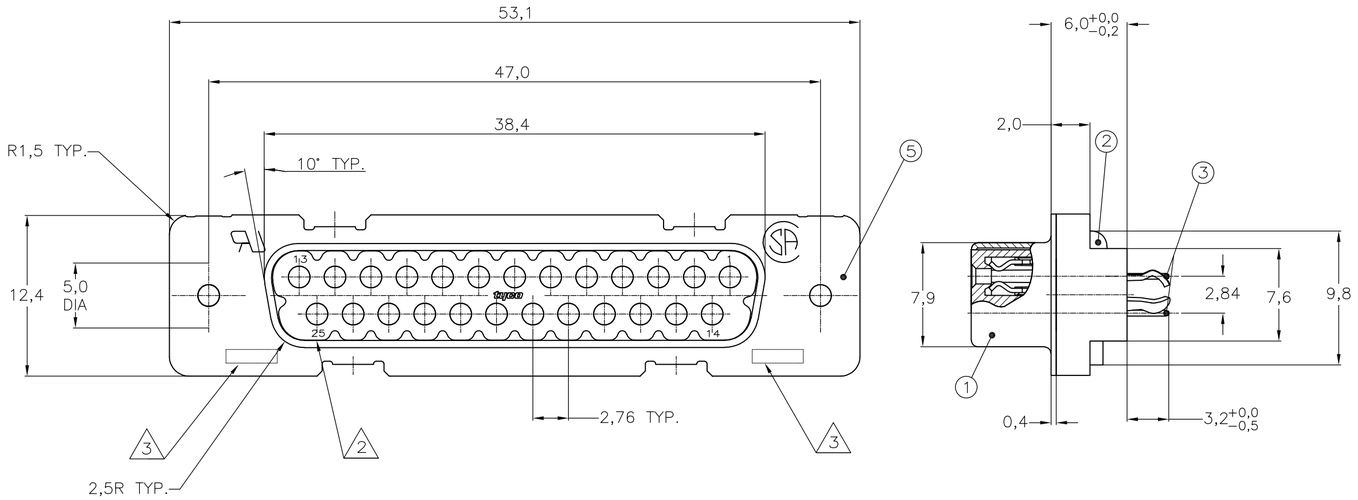

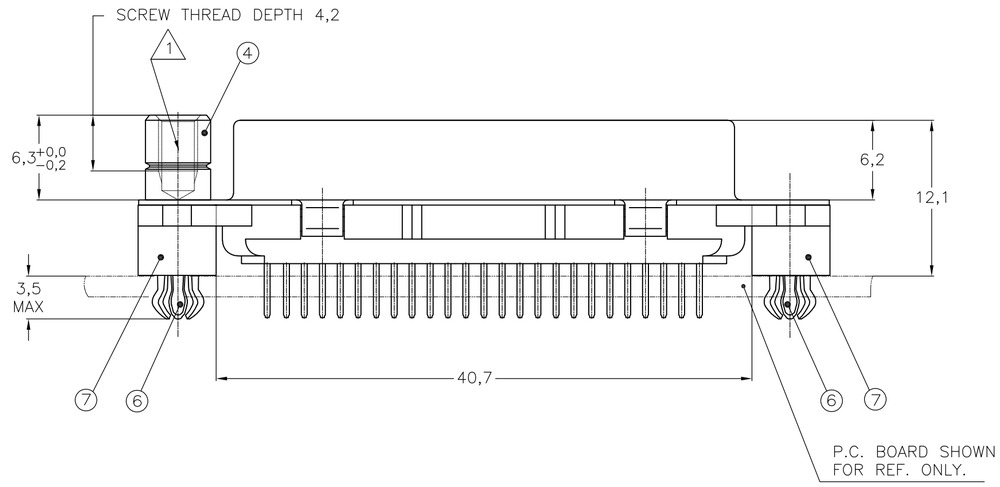

RECOMMENDED P.C. BOARD HOLE-LAYOUT

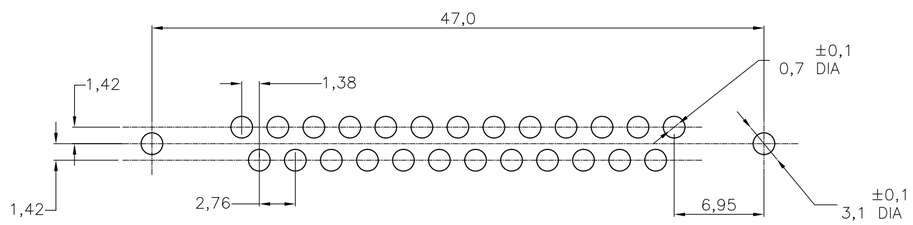

ACCESSORIES PREFIX "Z"										
5	BUSHING WITH THROUGHHOLE 3,1 DIA.					2				
5	BUSHING WITH THREAD 4-40 UNC		2				2			
5	BUSHING WITH THREAD M3			2				2		
4	FEMALE SCREWLOCK WITH THREAD 4-40 UNC				2				2	
4	FEMALE SCREWLOCK WITH THREAD M3					2				2
6	BOARDLOCK		2	2	2	2				
ITEM NR.	DESCRIPTION OF ACCESSORY	-	1-XXXXX-Y	2-XXXXX-Y	3-XXXXX-Y	4-XXXXX-Y	5-XXXXX-Y	6-XXXXX-Y	7-XXXXX-Y	8-XXXXX-Y	9-XXXXX-Y

HOW TO ORDER:

25 POS.-----> Z-338315-Y

PREFIX FOR ACCESSORIES

BASIC PARTNR.

SUFFIX FOR PLATING

PLATING SUFFIX "Y"

GOLD OVER NICKEL AS PER PERFORMANCE LEVEL 2 (DIN 41652)
SOLDER-PART :TIN-PLATING 3µm
} -Y = -2

1. GROOVE INDICATES VERSION WITH 4-40 UNC INNER THREAD; WITHOUT GROOVE INDICATES VERSION WITH M3 INNER THREAD.
2. CAVITY IDENTIFICATION AT FRONT SIDE ONLY.
3. PARTNUMBER AND DATE CODE.
4. WHEN BOARDLOCKS ARE USED, CONNECTOR CAN BE USED FOR PCB THICKNESS OF 1,6 mm ONLY.
5. AIR AND CREEPAGE DISTANCES ACCORDING TO DIN 41652

ITEM NRS./MATERIAL :

1 SHELL	BRIGHT TINPLATED STEEL
2 HOUSING	GLASSFILLED POLYESTER, COLOR : BLACK
3 CONTACTS	PHOSPHORBRONZE (PLATING : SEE TABLE ABOVE)
4 FEMALE SCREWLOCK	TINPLATED STEEL (INNER THREAD 4-40 UNC OR M3)
5 BUSHING	TINPLATED STEEL (INNER THREAD 4-40 UNC OR M3 OR 3,1 DIA. THROUGHHOLE)
6 BOARDLOCK	TINPLATED PHOSPHORBRONZE
7 STAND OFF	ULTRAMID VO COLOR : BLACK

338315

THIS DRAWING IS A CONTROLLED DOCUMENT.

DIMENSIONS: mm

TOLERANCES UNLESS OTHERWISE SPECIFIED:
0 PLC ± -
1 PLC ± -
2 PLC ± -
3 PLC ± -
4 PLC ± -
ANGLES ± -

MATERIAL -
FINISH -

DWN	J.v.LIEMPT	01JUL97
CHK	C.SOUISA	09SEP97
APVD	E.LEIJTENS	09SEP97
PRODUCT SPEC	—	
APPLICATION SPEC	—	
WEIGHT	—	

TE Connectivity

NAME: HDP-20 SIZE 3 VERTICAL+ RECEPTACLE HEADER; WITH SOLDER CONTACTS

SIZE	CAGE CODE	DRAWING NO	RESTRICTED TO
A2	00779	C-338315	—

CUSTOMER DRAWING | SCALE NTS | SHEET 1 OF 1 | REV F1