DRAWING FOR REFERENCE: This is subject to change without notice
08/11/2012

HRS DRAWING FOR REFERENCE

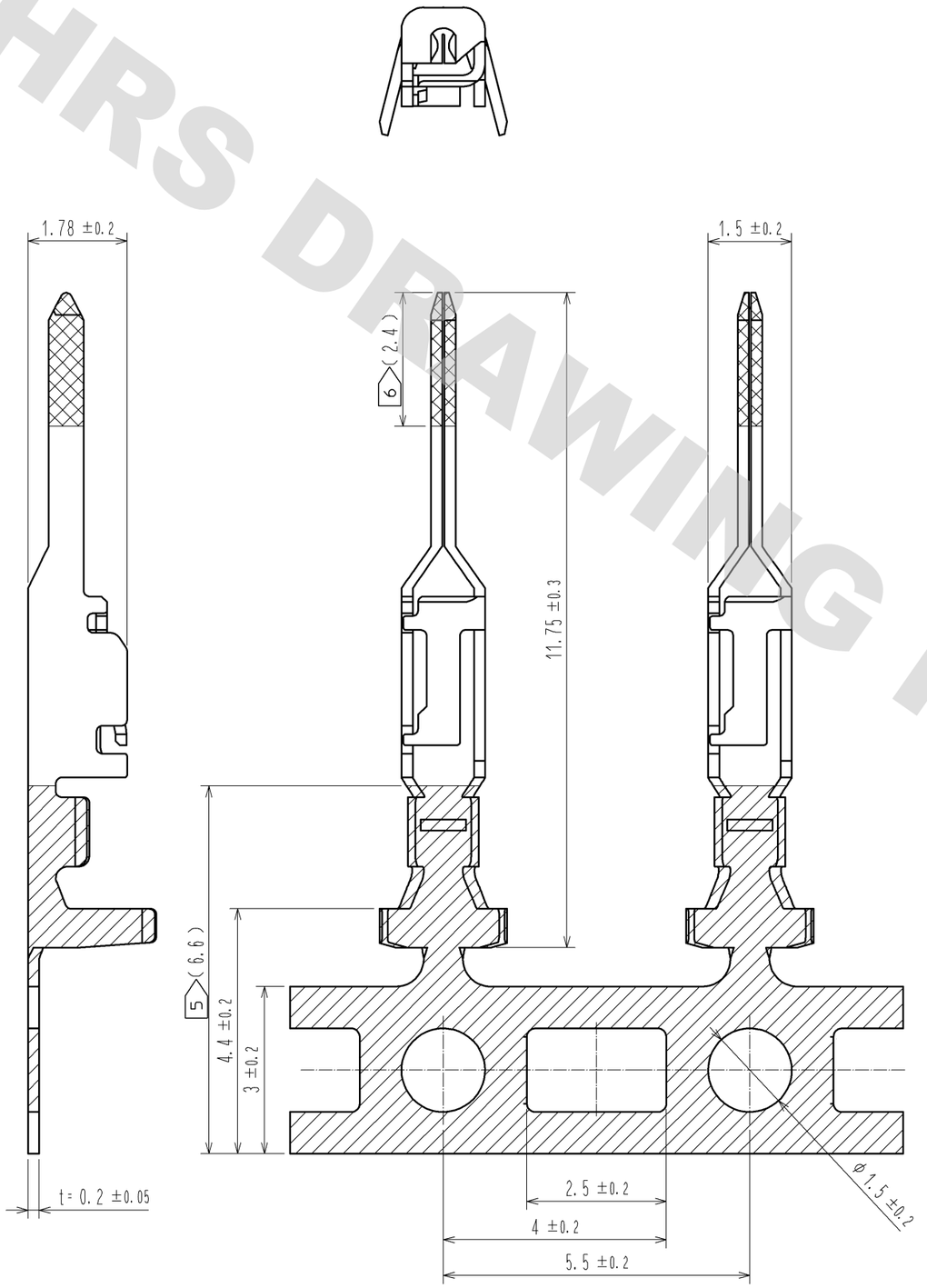

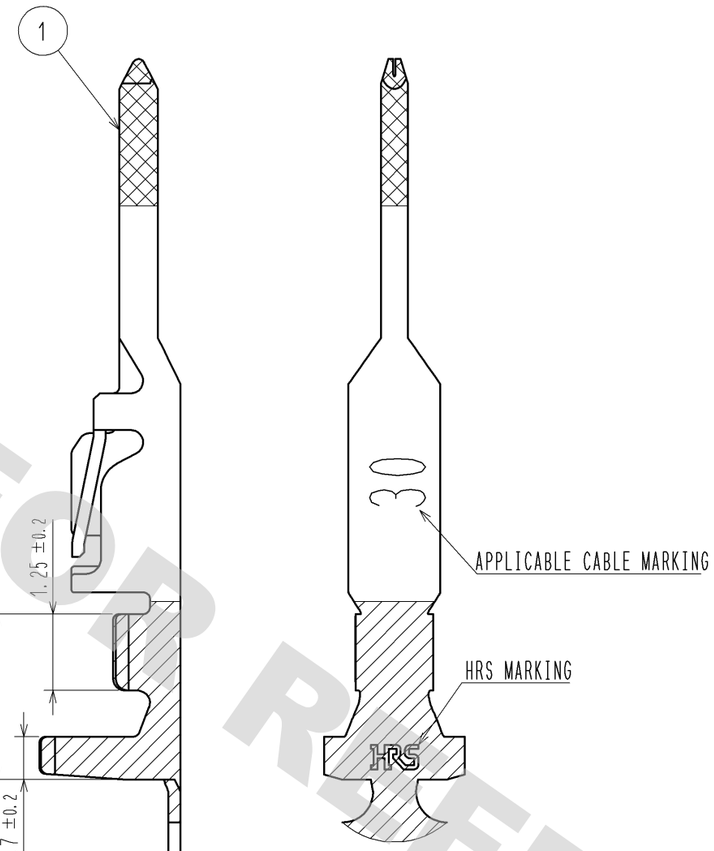

2 STYLE AND DIMENSION OF REEL

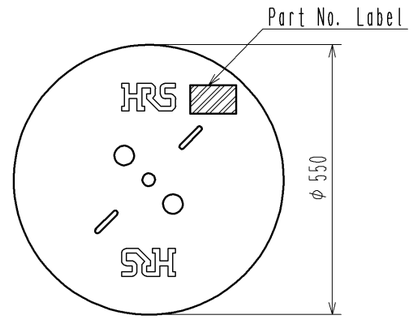

Detail of part No. Label

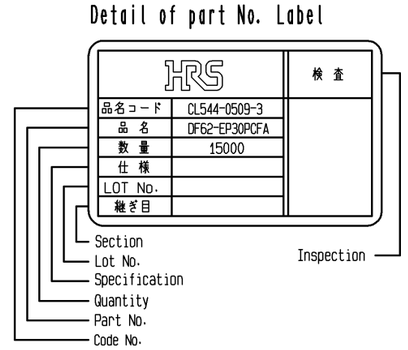

NOTE 1. 1RL:15000 CONTACTS.
2 STYLE OF REEL AND BOX ARE SHOWN IN FIGURE.
3. A MAXIMUM OF 5 REELS ARE PACKED UP IN ONE BOX.
4. PLEASE BE SURE TO CHECK THE FORM OF CRIMPING USING A CABLE. WHEN YOU ADJUST APPLICATOR.
5 TIN PLATING AREA.
6 GOLD PLATING AREA.
7. THE DIMENSIONS IN PARENTHESIS ARE FOR REFERENCE.

NO.	MATERIAL	FINISH , REMARKS	NO.	MATERIAL	FINISH , REMARKS
			1	PHOSPHOR BRONZE	CONTACT AREA : GOLD PLATING 0.2 μm MIN CARRIER/BARREL AREA : TIN PLATING 1μm MIN OTHERS : NICKEL PLATING 0.5 μm MIN

UNITS	SCALE	COUNT	DESCRIPTION OF REVISIONS	DESIGNED	CHECKED	DATE
mm	10 : 1	△				

HRS HIROSE ELECTRIC CO., LTD.

APPROVED	: KI. AKIYAMA	12.01.20	DRAWING NO.	EDC3-339879-00
CHECED	: MN. KENJO	12.01.20	PART NO.	DF62-EP30PCFA
DESIGNED	: TO. HORII	12.01.20	CODE NO.	CL544-0509-3-00
DRAWN	: TO. HORII	12.01.20		△ 1/1