WIRING DIAGRAM

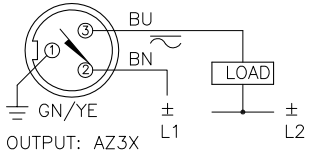

WARNING: NO SHORT-CIRCUIT PROTECTION.
ALWAYS WIRE A LOAD IN SERIES WITH THE SENSOR.

SPECIFICATIONS

OPERATING VOLTAGE	20–250 VAC, 10–300 VDC
LINE FREQUENCY	40–60 Hz
DIFFERENTIAL TRAVEL (HYSTERESIS)	3–15% (5% TYPICAL)
VOLTAGE DROP ACROSS CONDUCTING SENSOR	<7.0 V at FULL RATED CURRENT
OUTPUT FUNCTION	NORMALLY OPEN 2–WIRE AC/DC
SHORT–CIRCUIT PROTECTED	NO
CONTINUOUS LOAD CURRENT	AC: ≤400 mA; DC: ≤300 mA
OFF–STATE (LEAKAGE) CURRENT	<1.7 mA
MINIMUM LOAD CURRENT	≥5.0 mA
INRUSH CURRENT	≤8.0 A (≤10 ms, 5% DUTY CYCLE)
TIME DELAY BEFORE AVAILABILITY	≤25 ms
POWER–ON EFFECT	Per IEC 947–5–2
TRANSIENT PROTECTION	Per EN 60947–5–2
OPERATING TEMPERATURE	–25°C to +70°C (–13°F to +158°F)
ENCLOSURE	MEETS NEMA 1, 3, 4, 6, 13 AND IEC IP67
SHOCK	30 g, 11 ms
VIBRATION	55 Hz, 1 mm AMPLITUDE (IN ALL 3 PLANES)
LED FUNCTION	RED: OUTPUT ENERGIZED
RATED OPERATING DISTANCE(Sn)	10 mm = .394" (NOMINAL)
SWITCHING FREQUENCY	20 Hz
REPEATABILITY	≤2% OF RATED OPERATING DISTANCE
EMBEDDABLE (SHIELDED)	NO
MATING PLUGS/CABLES	3–PIN "MINIFAST" CONSTRUCTION
LOCKNUT M18x1	24.0 mm AF, 27.5 mm AC, 4.0 mm THK

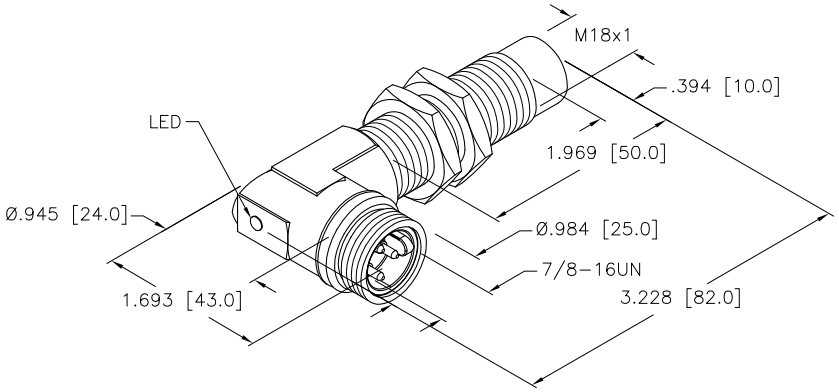

NOTE:
MATERIALS:
BARREL – CHROME PLATED BRASS
LOCKNUTS – CHROME PLATED BRASS
CONNECTOR – CHROME PLATED BRASS
SENSING FACE – PA12–GF30 PLASTIC
CONNECTOR ADAPTER – DIE–CAST ZINC

REV	DESCRIPTION	BY	DATE	ECO NO.
D	UPDATE KEYWAY ORIENTATION	RDS	10/20/03	10665

RELATED DOCUMENTS
1.
2.
3.
4.

3RD ANGLE PROJECTION

TURCK INC
High Technology Sensors and Automation Controls
3000 CAMPUS DRIVE
MINNEAPOLIS, MN 55441
1–800–544–7769
(763) 553–7300
(763) 553–0708 fax
turck.com

MATERIAL: SEE NOTE

FINISH

ALL DIMENSIONS DISPLAYED ON THIS DRAWING ARE FOR REFERENCE ONLY

CONTACT TURCK FOR MORE INFORMATION

DRFT: GMB
DATE: 09/28/88
DSGN:
SCALE: 1=2.0

UNIT OF MEASUREMENT
INCH [MILLIMETER]
DO NOT SCALE THIS DRAWING

DESCRIPTION: Ni10–G18–AZ3X–B1431 50 mm

IDENTIFICATION NO.: T4372500
REV: D

FILE: T4372500
SHEET 1 OF 1